TOSHIBA

FILE NO. A06-011

SERVICE MANUAL

AIR-CONDITIONER

SPLIT TYPE

Indoor Unit	Outdoor Unit
<High Wall, Heat Pump Type>	**<Heat Pump Type>**
(Standard Type)	
RAS-B10SKVP-E	***RAS-10SAVP-E***
RAS-B13SKVP-E	***RAS-13SAVP-E***
RAS-B16SKVP-E	***RAS-16SAVP-E***
(North Europe Type)	
RAS-10SKVP-ND	***RAS-10SAVP-ND***
RAS-13SKVP-ND	***RAS-13SAVP-ND***
RAS-16SKVP-ND	***RAS-16SAVP-ND***

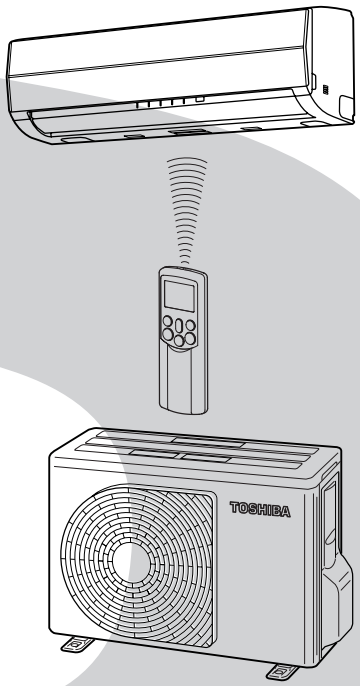

HFC

R410A

PRINTED IN JAPAN, Fub, 2007 ToMo

CONTENTS

1. SAFETY PRECAUTIONS 3
2. SPECIFICATIONS 5
3. REFRIGERANT R410A 9
4. CONSTRUCTION VIEWS 17
5. WIRING DIAGRAM 20
6. SPECIFICATIONS OF ELECTRICAL PARTS 22
7. REFRIGERANT CYCLE DIAGRAM 23
8. CONTROL BLOCK DIAGRAM 25
9. OPERATION DESCRIPTION 27
10. INSTALLATION PROCEDURE 55
11. HOW TO DIAGNOSE THE TROUBLE 68
12. HOW TO REPLACE THE MAIN PARTS 89
13. EXPLODED VIEWS AND PARTS LIST 108
14. SET UP OF SERVICE P.C. BOARD 118

1. SAFETY PRECAUTIONS

For general public use

Power supply cord of outdoor unit shall be 1.5 mm ² (H07RN-F or 60245IEC66) polychloroprene sheathed flexible cord.

- Read this “SAFETY PRECAUTIONS” carefully before servicing.
- The precautions described below include the important items regarding safety. Observe them without fail.
- After the servicing work, perform a trial operation to check for any problem.
- Turn off the main power supply switch (or breaker) before the unit maintenance.

CAUTION

New Refrigerant Air Conditioner Installation

- **THIS AIR CONDITIONER ADOPTS THE NEW HFC REFRIGERANT (R410A) WHICH DOES NOT DESTROY OZONE LAYER.**

R410A refrigerant is apt to be affected by impurities such as water, oxidizing membrane, and oils because the working pressure of R410A refrigerant is approx. 1.6 times of refrigerant R22. Accompanied with the adoption of the new refrigerant, the refrigeration machine oil has also been changed. Therefore, during installation work, be sure that water, dust, former refrigerant, or refrigeration machine oil does not enter into the new type refrigerant R410A air conditioner circuit.

To prevent mixing of refrigerant or refrigerating machine oil, the sizes of connecting sections of charging port on main unit and installation tools are different from those used for the conventional refrigerant units.

Accordingly, special tools are required for the new refrigerant (R410A) units. For connecting pipes, use new and clean piping materials with high pressure fittings made for R410A only, so that water and/or dust does not enter. Moreover, do not use the existing piping because there are some problems with pressure fittings and possible impurities in existing piping.

CAUTION

TO DISCONNECT THE APPLIANCE FROM THE MAIN POWER SUPPLY

A switch or circuit breaker that can disconnect all poles must be included in the fixed wiring.
Be sure to use an approved circuit breaker or switch.

DANGER

- **ASK AN AUTHORIZED DEALER OR QUALIFIED INSTALLATION PROFESSIONAL TO INSTALL/ MAINTAIN THE AIR CONDITIONER.**

  INAPPROPRIATE SERVICING MAY RESULT IN WATER LEAKAGE, ELECTRIC SHOCK OR FIRE.
- TURN OFF MAIN POWER SUPPLY BEFORE ATTEMPTING ANY ELECTRICAL WORK. MAKE SURE ALL POWER SWITCHES ARE OFF. FAILURE TO DO SO MAY CAUSE ELECTRIC SHOCK.

⚠ **DANGER: HIGH VOLTAGE**

The high voltage circuit is incorporated.

Be careful to do the check service, as the electric shock may be caused in case of touching parts on the P.C. board by hand.

- CORRECTLY CONNECT THE CONNECTING CABLE. IF THE CONNECTING CABLE IS INCORRECTLY CONNECTED, ELECTRIC PARTS MAY BE DAMAGED.
- CHECK THAT THE EARTH WIRE IS NOT BROKEN OR DISCONNECTED BEFORE SERVICE AND INSTALLATION. FAILURE TO DO SO MAY CAUSE ELECTRIC SHOCK.

- DO NOT INSTALL NEAR CONCENTRATIONS OF COMBUSTIBLE GAS OR GAS VAPORS. FAILURE TO FOLLOW THIS INSTRUCTION CAN RESULT IN FIRE OR EXPLOSION.
- TO PREVENT THE INDOOR UNIT FROM OVERHEATING AND CAUSING A FIRE HAZARD, PLACE THE UNIT WELL AWAY (MORE THAN 2 M) FROM HEAT SOURCES SUCH AS RADIATORS, HEAT REGISTORS, FURNACE, STOVES, ETC.
- WHEN MOVING THE AIR-CONDITIONER FOR INSTALLATION IN ANOTHER PLACE, BE VERY CAREFUL NOT TO ALLOW THE SPECIFIED REFRIGERANT (R410A) TO BECOME MIXED WITH ANY OTHER GASEOUS BODY INTO THE REFRIGERATION CIRCUIT. IF AIR OR ANY OTHER GAS IS MIXED IN THE REFRIGERANT, THE GAS PRESSURE IN THE REFRIGERATION CIRCUIT WILL BECOME ABNORMALLY HIGH AND IT MAY RESULT IN THE PIPE BURSTING AND POSSIBLE PERSONNEL INJURIES.
- IN THE EVENT THAT THE REFRIGERANT GAS LEAKS OUT OF THE PIPE DURING THE SERVICE WORK AND THE INSTALLATION WORK, IMMEDIATELY LET FRESH AIR INTO THE ROOM. IF THE REFRIGERANT GAS IS HEATED, SUCH AS BY FIRE, GENERATION OF POISONOUS GAS MAY RESULT.

WARNING

- **Never modify this unit by removing any of the safety guards or bypass any of the safety interlock switches.**
- **Do not install in a place which cannot bear the weight of the unit. Personal injury and property damage can result if the unit falls.**
- **After the installation work, confirm that refrigerant gas does not leak.**
  If refrigerant gas leaks into the room and flows near a fire source, such as a cooking range, noxious gas may generate.
- **The electrical work must be performed by a qualified electrician in accordance with the Installation Manual. Make sure the air conditioner uses an exclusive circuit.**
  An insufficient circuit capacity or inappropriate installation may cause fire.
- **When wiring, use the specified cables and connect the terminals securely to prevent external forces applied to the cable from affecting the terminals.**
- **Be sure to provide grounding.**
  Do not connect ground wires to gas pipes, water pipes, lightning rods or ground wires for telephone cables.
- **Conform to the regulations of the local electric company when wiring the power supply.**
  Inappropriate grounding may cause electric shock.

CAUTION

- Exposure of unit to water or other moisture before installation may result in an electrical short.
  Do not store in a wet basement or expose to rain or water.
- Do not install in a place that can increase the vibration of the unit. Do not install in a place that can amplify the noise level of the unit or where noise or discharged air might disturb neighbors.
- To avoid personal injury, be careful when handling parts with sharp edges.
- **Perform the specified installation work to guard against an earthquake.**
  If the air conditioner is not installed appropriately, accidents may occur due to the falling unit.

For Reference:

If a heating operation would be continuously performed for a long time under the condition that the outdoor temperature is 0°C or lower, drainage of defrosted water may be difficult due to freezing of the bottom plate, resulting in a trouble of the cabinet or fan.

It is recommended to procure an antifreeze heater locally for a safe installation of the air conditioner.

For details, contact the dealer.

2. SPECIFICATIONS

2-1. Specifications

RAS-B10SKVP-E/RAS-B13SKVP-E/RAS-B16SKVP-E, RAS-10SAVP-E/RAS-13SAVP-E/RAS-16SAVP-E

Unit model	Indoor			**RAS-B10SKVP-E**		**RAS-B13SKVP-E**		**RAS-B16SKVP-E**	
	Outdoor			**RAS-10SAVP-E**		**RAS-13SAVP-E**		**RAS-16SAVP-E**	
Cooling capacity			(kW)	2.5		3.5		4.5	
Cooling capacity range			(kW)	0.5–3.5		0.6–4.5		0.8–5.0	
Heating capacity			(kW)	3.2		4.2		5.5	
Heating capacity range			(kW)	0.6 – 6.1		0.6 – 6.9		0.8 – 8.0	
Power supply				1 Ph/50Hz/220–240 V, 1 Ph/60Hz/220 V					
Electric characteristics	Indoor	Operation mode		**Cooling**	**Heating**	**Cooling**	**Heating**	**Cooling**	**Heating**
		Running current	(A)	0.15	0.15	0.15	0.15	0.15	0.15
		Power consumption	(W)	30	30	30	30	30	30
		Power factor	(%)	87	87	87	87	87	87
	Outdoor	Operation mode		**Cooling**	**Heating**	**Cooling**	**Heating**	**Cooling**	**Heating**
		Running current	(A)	2.57/2.45/2.34	3.15/3.00/2.87	4.00/3.82/3.66	4.40/4.20/4.02	6.18/5.90/5.65	6.83/6.43/6.25
		Power consumption	(W)	460	600	820	920	1320	1460
		Power factor	(%)	82	87	93	95	97	97
		Starting current	(A)	3.30/3.15/3.02		4.55/4.35/4.17		6.98/6.68/6.40	
COP			(Cooling/Heating)	5.10/5.08		4.12/4.42		3.33/3.69	
Operating noise	Indoor	High	(Cooling/Heating) (dB•A)	42/43		43/44		45/45	
		Medium	(Cooling/Heating) (dB•A)	33/36		34/37		36/39	
		Low	(Cooling/Heating) (dB•A)	27/27		27/27		29/29	
	Outdoor		(Cooling/Heating) (dB•A)	46/47		48/50		49/50	
Indoor unit	Unit model			**RAS-B10SKVP-E**		**RAS-B13SKVP-E**		**RAS-B16SKVP-E**	
	Dimension	Height	(mm)	250		250		250	
		Width	(mm)	790		790		790	
		Depth	(mm)	208		208		208	
	Net weight		(kg)	9		9		9	
	Fan motor output		(W)	30		30		30	
	Air flow rate		(Cooling/Heating) (m³/h)	550/620		570/640		630/670	
Outdoor unit	Unit model			**RAS-10SAVP-E**		**RAS-13SAVP-E**		**RAS-16SAVP-E**	
	Dimension	Height	(mm)	550		550		550	
		Width	(mm)	780		780		780	
		Depth	(mm)	290		290		290	
	Net weight		(kg)	38		38		38	
	Compressor	Motor output	(W)	750		750		750	
		Type		Twin rotary type with DC-inverter variable speed control					
		Model		DA111A1F-24F		DA111A1F-24F		DA111A1F-24F	
	Fan motor output		(W)	43		43		43	
	Air flow rate		(Cooling/Heating) (m³/h)	1740/1620		1950/1620		2160/1740	
Piping connection	Type			Flare connection		Flare connection		Flare connection	
	Indoor unit	Liquid side		Ø6.35		Ø6.35		Ø6.35	
		Gas side		Ø9.52		Ø9.52		Ø12.7	
	Outdoor unit	Liquid side		Ø6.35		Ø6.35		Ø6.35	
		Gas side		Ø9.52		Ø9.52		Ø12.7	
	Maximum length		(m)	25		25		25	
	Maximum chargeless length		(m)	15		15		15	
	Maximum height difference		(m)	10		10		10	
Refrigerant	Name of refrigerant			R410A		R410A		R410A	
	Weight		(kg)	1.05		1.05		1.05	
Wiring connection	Power supply			3 Wires : includes earth (Outdoor)					
	Interconnection			4 Wires : includes earth					
Usable temperature range		Indoor	(Cooling/Heating) (°C)	21–32/0–28		21–32/0–28		21–32/0–28	
		Outdoor	(Cooling/Heating) (°C)	5–46/–15–24		5–46/–15–24		5–46/–15–24	
Accessory	Indoor unit	Installation plate		1		1		1	
		Wireless remote controller		1		1		1	
		Batteries		2		2		2	
		Remote controller holder		1		1		1	
		Mounting screw		6 (Ø4 × 25L)		6 (Ø4 × 25L)		6 (Ø4 × 25L)	
		Remote controller holder mounting screw		2 (Ø3.1 × 16L)		2 (Ø3.1 × 16L)		2 (Ø3.1 × 16L)	
		Plasma pure filter		1		1		1	
		Installation manual		1		1		1	
		Owner's manual		1		1		1	
	Outdoor unit	Drain nipple		1		1		1	
		Water-proof rubber cap		2		2		2	

- The specifications may be subject to change without notice for purpose of improvement.

RAS-10SKVP-ND, RAS-13SKVP-ND, RAS-16SKVP-ND/RAS-10SAVP-ND, RAS-13SAVP-ND, RAS-16SAVP-ND

Unit model	Indoor			**RAS-10SKVP-ND**		**RAS-13SKVP-ND**		**RAS-16SKVP-ND**	
	Outdoor			**RAS-10SAVP-ND**		**RAS-13SAVP-ND**		**RAS-16SAVP-ND**	
Cooling capacity			(kW)	2.5		3.5		4.5	
Cooling capacity range			(kW)	0.5–3.5		0.6–4.5		0.8–5.0	
Heating capacity			(kW)	3.2		4.2		5.5	
Heating capacity range			(kW)	0.6 – 6.1		0.6 – 6.9		0.8 – 8.0	
Power supply				1 Ph/50Hz/220–240 V					
Electric characteristics	Indoor	Operation mode		**Cooling**	**Heating**	**Cooling**	**Heating**	**Cooling**	**Heating**
		Running current	(A)	0.15	0.15	0.15	0.15	0.15	0.15
		Power consumption	(W)	30	30	30	30	30	30
		Power factor	(%)	87	87	87	87	87	87
	Outdoor	Operation mode		**Cooling**	**Heating**	**Cooling**	**Heating**	**Cooling**	**Heating**
		Running current	(A)	2.57/2.45/2.34	3.15/3.00/2.87	4.00/3.82/3.66	4.40/4.20/4.02	6.18/5.90/5.65	6.83/6.43/6.25
		Power consumption	(W)	460	600	820	920	1320	1460
		Power factor	(%)	82	87	93	95	97	97
		Starting current	(A)	3.30/3.15/3.02		4.55/4.35/4.17		6.98/6.68/6.40	
COP			(Cooling/Heating)	5.10/5.08		4.12/4.42		3.33/3.69	
Operating noise	Indoor	High	(Cooling/Heating) (dB•A)	42/43		43/44		45/45	
		Medium	(Cooling/Heating) (dB•A)	33/36		34/37		36/39	
		Low	(Cooling/Heating) (dB•A)	27/27		27/27		29/29	
	Outdoor		(Cooling/Heating) (dB•A)	46/47		48/50		49/50	
Indoor unit	Unit model			**RAS-10SKVP-ND**		**RAS-13SKVP-ND**		**RAS-16SKVP-ND**	
	Dimension	Height	(mm)	250		250		250	
		Width	(mm)	790		790		790	
		Depth	(mm)	208		208		208	
	Net weight		(kg)	9		9		9	
	Fan motor output		(W)	30		30		30	
	Air flow rate		(Cooling/Heating) (m³/h)	550/620		570/640		630/670	
Outdoor unit	Unit model			**RAS-10SAVP-ND**		**RAS-13SAVP-ND**		**RAS-16SAVP-ND**	
	Dimension	Height	(mm)	550		550		550	
		Width	(mm)	780		780		780	
		Depth	(mm)	290		290		290	
	Net weight		(kg)	38		38		38	
	Compressor	Motor output	(W)	750		750		750	
		Type		Twin rotary type with DC-inverter variable speed control					
		Model		DA111A1F-24F		DA111A1F-24F		DA111A1F-24F	
	Fan motor output		(W)	43		43		43	
	Air flow rate		(Cooling/Heating) (m³/h)	1740/1620		1950/1620		2160/1740	
Piping connection	Type			Flare connection		Flare connection		Flare connection	
	Indoor unit	Liquid side		Ø6.35		Ø6.35		Ø6.35	
		Gas side		Ø9.52		Ø9.52		Ø12.7	
	Outdoor unit	Liquid side		Ø6.35		Ø6.35		Ø6.35	
		Gas side		Ø9.52		Ø9.52		Ø12.7	
	Maximum length		(m)	25		25		25	
	Maximum chargeless length		(m)	15		15		15	
	Maximum height difference		(m)	10		10		10	
Refrigerant	Name of refrigerant			R410A		R410A		R410A	
	Weight		(kg)	1.05		1.05		1.05	
Wiring connection	Power supply			3 Wires : includes earth (Outdoor)					
	Interconnection			4 Wires : includes earth					
Usable temperature range		Indoor	(Cooling/Heating) (°C)	21–32/0–28		21–32/0–28		21–32/0–28	
		Outdoor	(Cooling/Heating) (°C)	5–46/–15–24		5–46/–15–24		5–46/–15–24	
Accessory	Indoor unit	Installation plate		1		1		1	
		Wireless remote controller		1		1		1	
		Batteries		2		2		2	
		Remote controller holder		1		1		1	
		Mounting screw		6 (Ø4 × 25L)		6 (Ø4 × 25L)		6 (Ø4 × 25L)	
		Remote controller holder mounting screw		2 (Ø3.1 × 16L)		2 (Ø3.1 × 16L)		2 (Ø3.1 × 16L)	
		Plasma pure filter		1		1		1	
		Installation manual		1		1		1	
		Owner's manual		1		1		1	
	Outdoor unit	Drain nipple		1		1		1	
		Water-proof rubber cap		2		2		2	

- The specifications may be subject to change without notice for purpose of improvement.

2-2. Operation Characteristic Curve

RAS-B10SKVP-E, RAS-B13SKVP-E, RAS-B16SKVP-E

<Cooling>

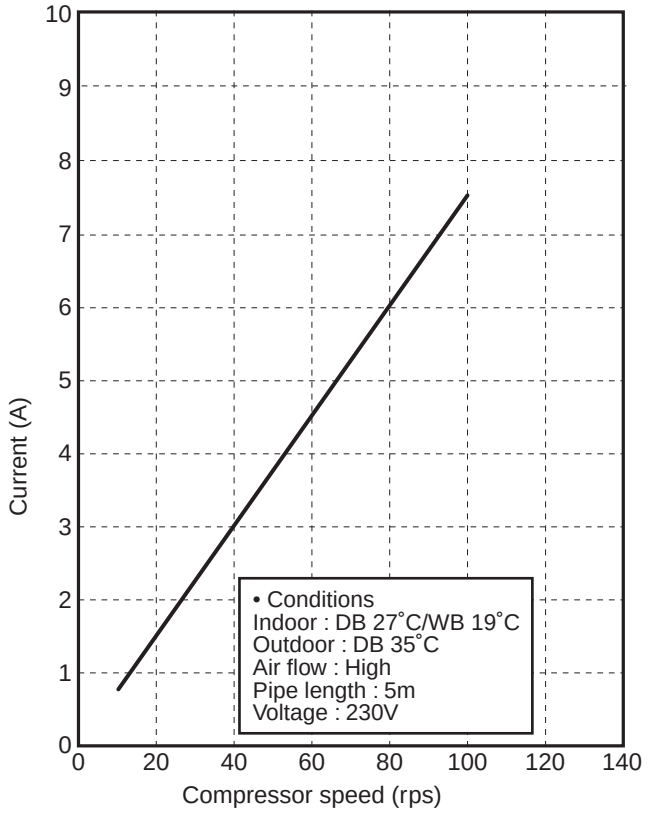

<Heating>

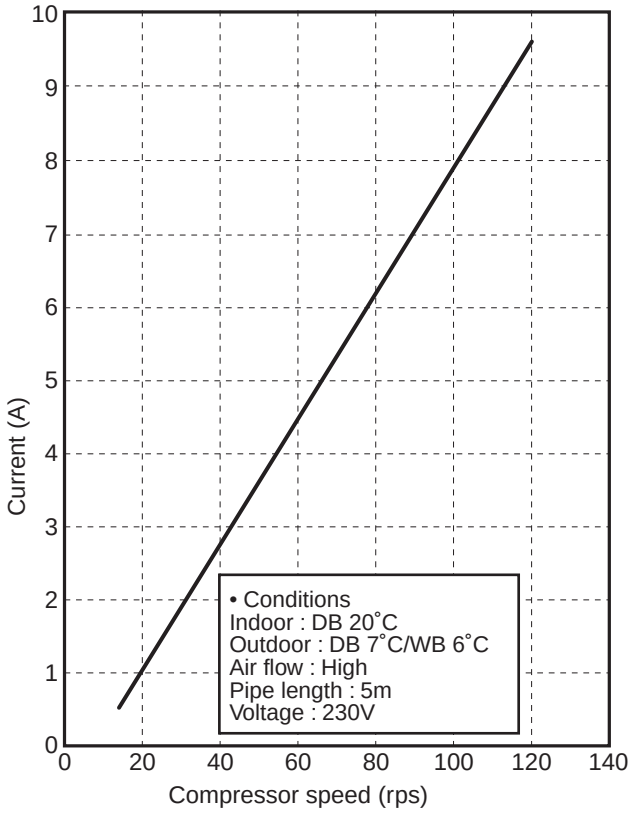

RAS-10SKVP-ND, RAS-13SKVP-ND, RAS-16SKVP-ND

<Cooling>

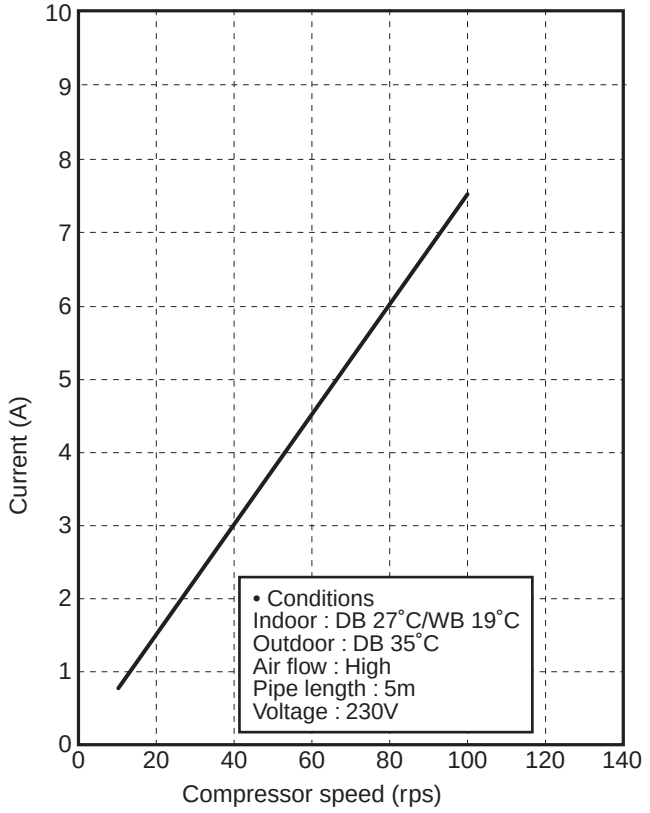

<Heating>

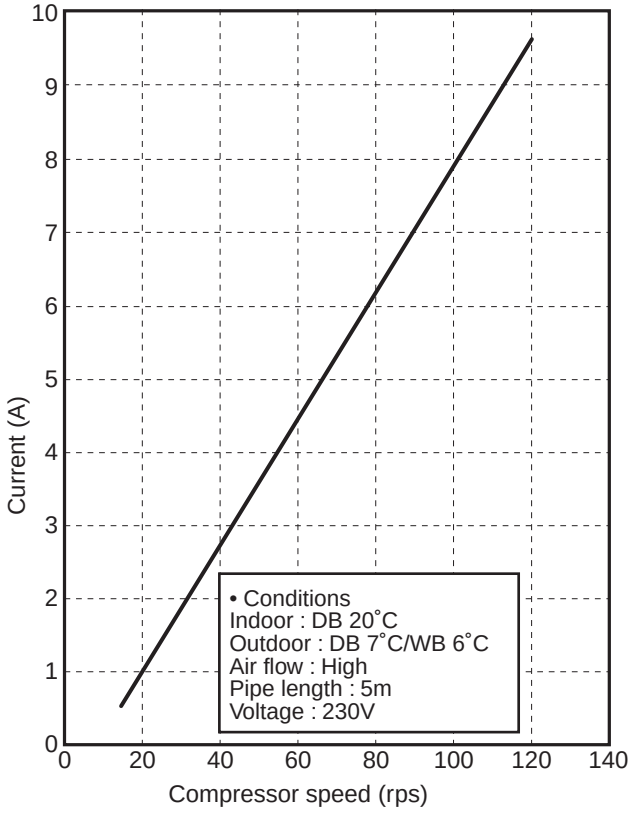

2-3. Capacity Variation Ratio According to Temperature

RAS-B10SKVP-E, RAS-B13SKVP-E, RAS-B16SKVP-E

<Cooling>

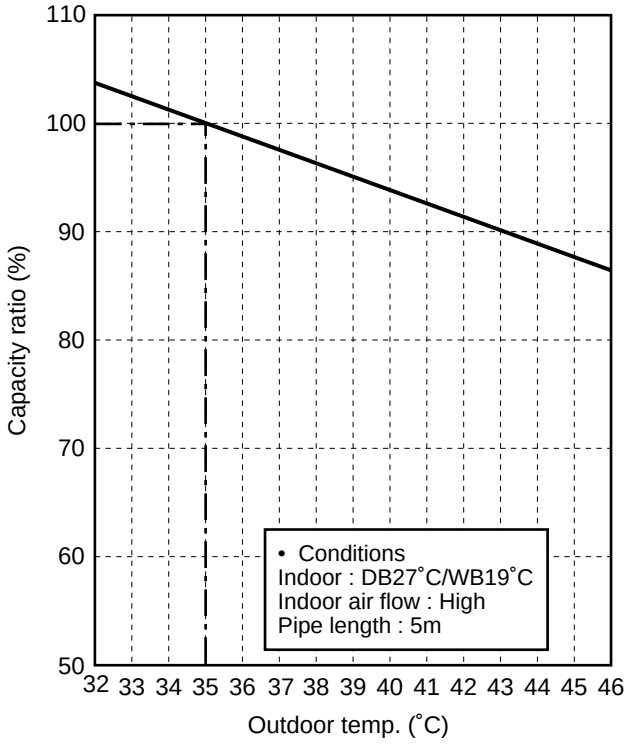

<Heating>

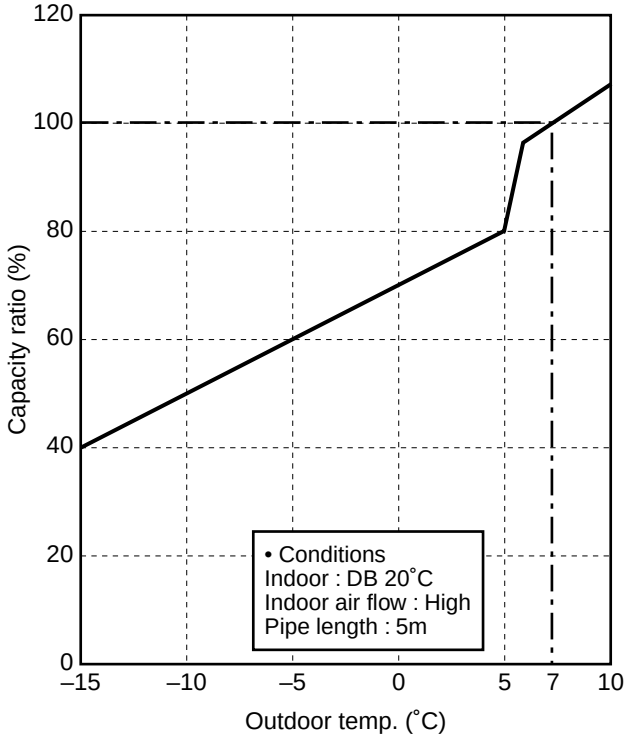

RAS-10SKVP-ND, RAS-13SKVP-ND, RAS-16SKVP-ND

<Cooling>

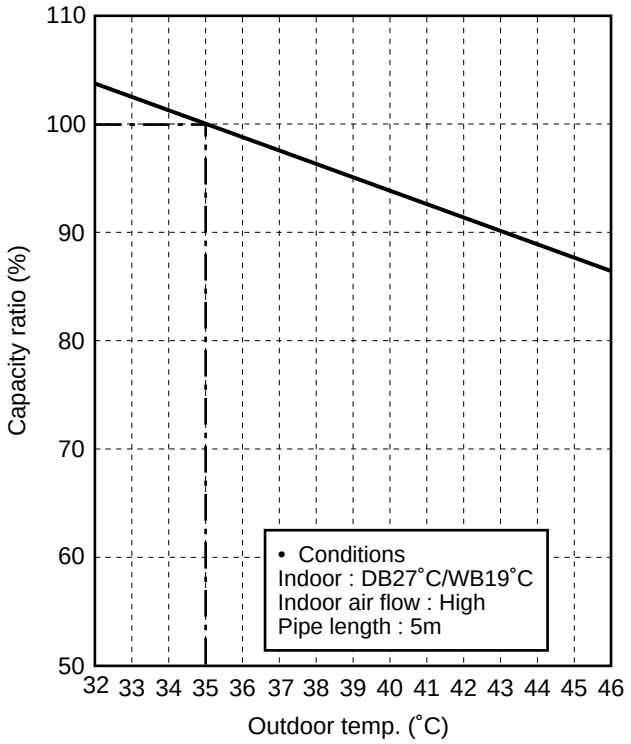

<Heating>

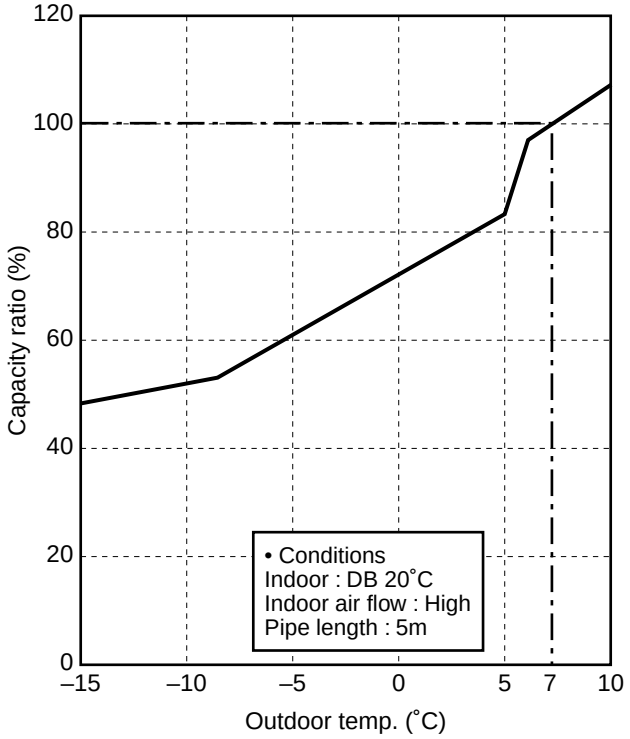

3. REFRIGERANT R410A

This air conditioner adopts the new refrigerant HFC (R410A) which does not damage the ozone layer.

The working pressure of the new refrigerant R410A is 1.6 times higher than conventional refrigerant (R22). The refrigerating oil is also changed in accordance with change of refrigerant, so be careful that water, dust, and existing refrigerant or refrigerating oil are not entered in the refrigerant cycle of the air conditioner using the new refrigerant during installation work or servicing time.

The next section describes the precautions for air conditioner using the new refrigerant. Conforming to contents of the next section together with the general cautions included in this manual, perform the correct and safe work.

3-1. Safety During Installation/Servicing

As R410A's pressure is about 1.6 times higher than that of R22, improper installation/servicing may cause a serious trouble. By using tools and materials exclusive for R410A, it is necessary to carry out installation/servicing safely while taking the following precautions into consideration.

1. Never use refrigerant other than R410A in an air conditioner which is designed to operate with R410A.

   If other refrigerant than R410A is mixed, pressure in the refrigeration cycle becomes abnormally high, and it may cause personal injury, etc. by a rupture.
2. Confirm the used refrigerant name, and use tools and materials exclusive for the refrigerant R410A.

   The refrigerant name R410A is indicated on the visible place of the outdoor unit of the air conditioner using R410A as refrigerant. To prevent mischarging, the diameter of the service port differs from that of R22.
3. If a refrigeration gas leakage occurs during installation/servicing, be sure to ventilate fully.

   If the refrigerant gas comes into contact with fire, a poisonous gas may occur.
4. When installing or removing an air conditioner, do not allow air or moisture to remain in the refrigeration cycle. Otherwise, pressure in the refrigeration cycle may become abnormally high so that a rupture or personal injury may be caused.
5. After completion of installation work, check to make sure that there is no refrigeration gas leakage.

   If the refrigerant gas leaks into the room, coming into contact with fire in the fan-driven heater, space heater, etc., a poisonous gas may occur.
6. When an air conditioning system charged with a large volume of refrigerant is installed in a small room, it is necessary to exercise care so that, even when refrigerant leaks, its concentration does not exceed the marginal level.

   If the refrigerant gas leakage occurs and its concentration exceeds the marginal level, an oxygen starvation accident may result.
7. Be sure to carry out installation or removal according to the installation manual.

   Improper installation may cause refrigeration trouble, water leakage, electric shock, fire, etc.
8. Unauthorized modifications to the air conditioner may be dangerous. If a breakdown occurs please call a qualified air conditioner technician or electrician.

   Improper repair's may result in water leakage, electric shock and fire, etc.

3-2. Refrigerant Piping Installation

3-2-1. Piping Materials and Joints Used

For the refrigerant piping installation, copper pipes and joints are mainly used.
Copper pipes and joints suitable for the refrigerant must be chosen and installed.
Furthermore, it is necessary to use clean copper pipes and joints whose interior surfaces are less affected by contaminants.

1. Copper Pipes

It is necessary to use seamless copper pipes which are made of either copper or copper alloy and it is desirable that the amount of residual oil is less than 40 mg/10 m.
Do not use copper pipes having a collapsed, deformed or discolored portion (especially on the interior surface).

Otherwise, the expansion valve or capillary tube may become blocked with contaminants.

As an air conditioner using R410A incurs pressure higher than when using R22, it is necessary to choose adequate materials.

Thicknesses of copper pipes used with R410A are as shown in Table 3-2-1. Never use copper pipes thinner than 0.8 mm even when it is available on the market.

Table 3-2-1 Thicknesses of annealed copper pipes

		Thickness (mm)	
Nominal diameter	**Outer diameter (mm)**	**R410A**	R22
1/4	6.35	0.80	0.80
3/8	9.52	0.80	0.80
1/2	12.70	0.80	0.80
5/8	15.88	1.00	1.00

2. Joints

For copper pipes, flare joints or socket joints are used. Prior to use, be sure to remove all contaminants.

a) Flare Joints

Flare joints used to connect the copper pipes cannot be used for pipings whose outer diameter exceeds 20 mm. In such a case, socket joints can be used.

Sizes of flare pipe ends, flare joint ends and flare nuts are as shown in Tables 3-2-3 to 3-2-6 below.

b) Socket Joints

Socket joints are such that they are brazed for connections, and used mainly for thick pipings whose diameter is larger than 20 mm.

Thicknesses of socket joints are as shown in Table 3-2-2.

Table 3-2-2 Minimum thicknesses of socket joints

Nominal diameter	Reference outer diameter of copper pipe jointed (mm)	Minimum joint thickness (mm)
1/4	6.35	0.50
3/8	9.52	0.60
1/2	12.70	0.70
5/8	15.88	0.80

3-2-2. Processing of Piping Materials

When performing the refrigerant piping installation, care should be taken to ensure that water or dust does not enter the pipe interior, that no other oil than lubricating oils used in the installed air-water heat pump is used, and that refrigerant does not leak.
When using lubricating oils in the piping processing, use such lubricating oils whose water content has been removed. When stored, be sure to seal the container with an airtight cap or any other cover.

1. Flare processing procedures and precautions

a) Cutting the Pipe

By means of a pipe cutter, slowly cut the pipe so that it is not deformed.

b) Removing Burrs and Chips

If the flared section has chips or burrs, refrigerant leakage may occur.
Carefully remove all burrs and clean the cut surface before installation.

c) Insertion of Flare Nut

d) Flare Processing

Make certain that a clamp bar and copper pipe have been cleaned.

By means of the clamp bar, perform the flare processing correctly.

Use either a flare tool for R410A or conventional flare tool.

Flare processing dimensions differ according to the type of flare tool. When using a conventional flare tool, be sure to secure “dimension A” by using a gauge for size adjustment.

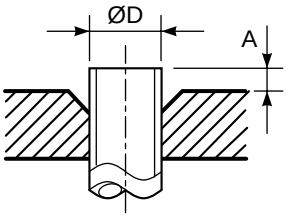

Fig. 3-2-1 Flare processing dimensions

Table 3-2-3 Dimensions related to flare processing for R410A

Nominal diameter	Outer diameter (mm)	Thickness (mm)	A (mm)		
			Flare tool for R410A clutch type	Conventional flare tool	
				Clutch type	Wing nut type
1/4	6.35	0.8	0 to 0.5	1.0 to 1.5	1.5 to 2.0
3/8	9.52	0.8	0 to 0.5	1.0 to 1.5	1.5 to 2.0
1/2	12.70	0.8	0 to 0.5	1.0 to 1.5	2.0 to 2.5
5/8	15.88	1.0	0 to 0.5	1.0 to 1.5	2.0 to 2.5

Table 3-2-4 Dimensions related to flare processing for R22

Nominal diameter	Outer diameter (mm)	Thickness (mm)	A (mm)		
			Flare tool for R22 clutch type	Conventional flare tool	
				Clutch type	Wing nut type
1/4	6.35	0.8	0 to 0.5	0.5 to 1.0	1.0 to 1.5
3/8	9.52	0.8	0 to 0.5	0.5 to 1.0	1.0 to 1.5
1/2	12.70	0.8	0 to 0.5	0.5 to 1.0	1.5 to 2.0
5/8	15.88	1.0	0 to 0.5	0.5 to 1.0	1.5 to 2.0

Table 3-2-5 Flare and flare nut dimensions for R410A

Nominal diameter	Outer diameter (mm)	Thickness (mm)	Dimension (mm)				Flare nut width (mm)
			A	B	C	D	
1/4	6.35	0.8	9.1	9.2	6.5	13	17
3/8	9.52	0.8	13.2	13.5	9.7	20	22
1/2	12.70	0.8	16.6	16.0	12.9	23	26
5/8	15.88	1.0	19.7	19.0	16.0	25	29

Table 3-2-6 Flare and flare nut dimensions for R22

Nominal diameter	Outer diameter (mm)	Thickness (mm)	Dimension (mm)				Flare nut width (mm)
			A	B	C	D	
1/4	6.35	0.8	9.0	9.2	6.5	13	17
3/8	9.52	0.8	13.0	13.5	9.7	20	22
1/2	12.70	0.8	16.2	16.0	12.9	20	24
5/8	15.88	1.0	19.7	19.0	16.0	23	27
3/4	19.05	1.0	23.3	24.0	19.2	34	36

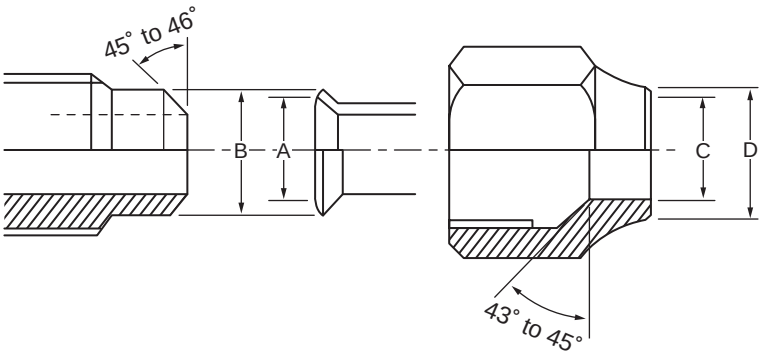

Fig. 3-2-2 Relations between flare nut and flare seal surface

2. Flare Connecting Procedures and Precautions

a) Make sure that the flare and union portions do not have any scar or dust, etc.

b) Correctly align the processed flare surface with the union axis.

c) Tighten the flare with designated torque by means of a torque wrench.

The tightening torque for R410A is the same as that for conventional R22.
Incidentally, when the torque is weak, the gas leakage may occur.

When it is strong, the flare nut may crack and may be made non-removable.
When choosing the tightening torque, comply with values designated by manufacturers.
Table 3-2-7 shows reference values.

NOTE :

When applying oil to the flare surface, be sure to use oil designated by the manufacturer.
If any other oil is used, the lubricating oils may deteriorate and cause the compressor to burn out.

Table 3-2-7 Tightening torque of flare for R410A [Reference values]

Nominal diameter	Outer diameter (mm)	Tightening torque N•m (kgf•cm)	Tightening torque of torque wrenches available on the market N•m (kgf•cm)
1/4	6.35	14 to 18 (140 to 180)	16 (160), 18 (180)
3/8	9.52	33 to 42 (330 to 420)	42 (420)
1/2	12.70	50 to 62 (500 to 620)	55 (550)
5/8	15.88	63 to 77 (630 to 770)	65 (650)

3-3. Tools

3-3-1. Required Tools

The service port diameter of packed valve of the outdoor unit in the air-water heat pump using R410A is changed to prevent mixing of other refrigerant. To reinforce the pressure-resisting strength, flare processing dimensions and opposite side dimension of flare nut (For Ø12.7 copper pipe) of the refrigerant piping are lengthened.

The used refrigerating oil is changed, and mixing of oil may cause a trouble such as generation of sludge, clogging of capillary, etc. Accordingly, the tools to be used are classified into the following three types.

1. Tools exclusive for R410A (Those which cannot be used for conventional refrigerant (R22))
2. Tools exclusive for R410A, but can be also used for conventional refrigerant (R22)
3. Tools commonly used for R410A and for conventional refrigerant (R22)

The table below shows the tools exclusive for R410A and their interchangeability.

Tools exclusive for R410A (The following tools for R410A are required.)

Tools whose specifications are changed for R410A and their interchangeability

No.	Used tool	Usage	R410A air-water heat pump installation		Conventional air-water heat pump installation
			Existence of new equipment for R410A	Whether conventional equipment can be used	Whether new equipment can be used with conventional refrigerant
1	Flare tool	Pipe flaring	Yes	***(Note 1)**	○
2	Copper pipe gauge for adjusting projection margin	Flaring by conventional flare tool	Yes	***(Note 1)**	***(Note 1)**
3	Torque wrench (For Ø12.7)	Connection of flare nut	Yes	×	×
4	Gauge manifold	Evacuating, refrigerant charge, run check, etc.	Yes	×	×
5	Charge hose				
6	Vacuum pump adapter	Vacuum evacuating	Yes	×	○
7	Electronic balance for refrigerant charging	Refrigerant charge	Yes	×	○
8	Refrigerant cylinder	Refrigerant charge	Yes	×	×
9	Leakage detector	Gas leakage check	Yes	×	○
10	Charging cylinder	Refrigerant charge	**(Note 2)**	×	×

(Note 1) When flaring is carried out for R410A using the conventional flare tools, adjustment of projection margin is necessary. For this adjustment, a copper pipe gauge, etc. are necessary.

(Note 2) Charging cylinder for R410A is being currently developed.

General tools (Conventional tools can be used.)

In addition to the above exclusive tools, the following equipments which serve also for R22 are necessary as the general tools.

1. Vacuum pump
   Use vacuum pump by attaching vacuum pump adapter.
2. Torque wrench (For Ø6.35, Ø9.52)
3. Pipe cutter
4. Reamer
5. Pipe bender
6. Level vial
7. Screwdriver (+, –)
8. Spanner or Monkey wrench
9. Hole core drill (Ø65)
10. Hexagon wrench (Opposite side 4mm)
11. Tape measure
12. Metal saw

Also prepare the following equipments for other installation method and run check.

1. Clamp meter
2. Thermometer
3. Insulation resistance tester
4. Electroscope

3-4. Recharging of Refrigerant

When it is necessary to recharge refrigerant, charge the specified amount of new refrigerant according to the following steps.

Recover the refrigerant, and check no refrigerant remains in the equipment.

↓

Connect the charge hose to packed valve service port at the outdoor unit's gas side.

↓

Connect the charge hose to the vacuum pump adapter.

↓

Open fully both packed valves at liquid and gas sides.

↓

Place the handle of the gauge manifold Low in the fully opened position, and turn on the vacuum pump's power switch. Then, evacuating the refrigerant in the cycle.

↓

When the compound gauge's pointer has indicated –0.1 Mpa (–76 cmHg), place the handle Low in the fully closed position, and turn off the vacuum pump's power switch.

↓

Keep the status as it is for 1 to 2 minutes, and ensure that the compound gauge's pointer does not return.

↓

Set the refrigerant cylinder to the electronic balance, connect the connecting hose to the cylinder and the connecting port of the electronic balance, and charge **liquid refrigerant**.

(For refrigerant charging, see the figure below.)

1. Never charge refrigerant exceeding the specified amount.
2. If the specified amount of refrigerant cannot be charged, charge refrigerant **bit by bit** in COOL mode.
3. Do not carry out additional charging.
   When additional charging is carried out if refrigerant leaks, the refrigerant composition changes in the refrigeration cycle, that is characteristics of the air conditioner changes, refrigerant exceeding the specified amount is charged, and working pressure in the refrigeration cycle becomes abnormally high pressure, and may cause a rupture or personal injury.

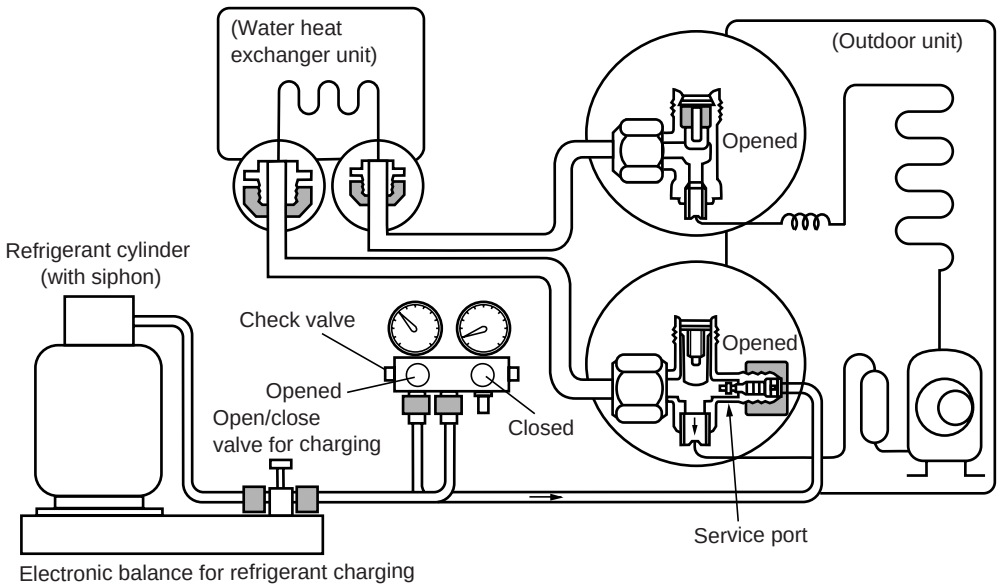

Fig. 3-4-1 Configuration of refrigerant charging

1. Be sure to make setting so that **liquid** can be charged.
2. When using a cylinder equipped with a siphon, liquid can be charged without turning it upside down.

It is necessary for charging refrigerant under condition of liquid because R410A is mixed type of refrigerant. Accordingly, when charging refrigerant from the refrigerant cylinder to the equipment, charge it turning the cylinder upside down if cylinder is not equipped with siphon.

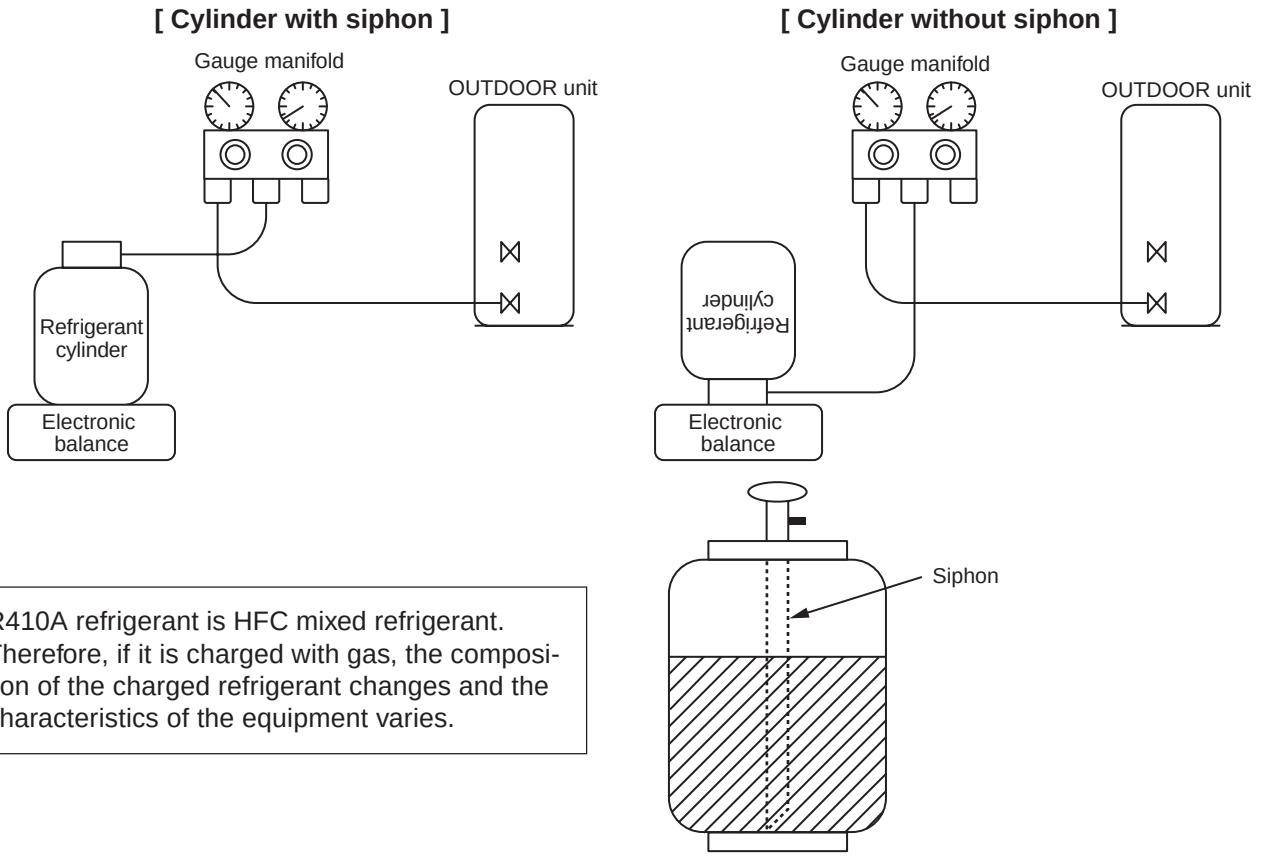

R410A refrigerant is HFC mixed refrigerant. Therefore, if it is charged with gas, the composition of the charged refrigerant changes and the characteristics of the equipment varies.

Fig. 3-4-2

3-5. Brazing of Pipes

3-5-1. Materials for Brazing

1. Silver brazing filler

Silver brazing filler is an alloy mainly composed of silver and copper. It is used to join iron, copper or copper alloy, and is relatively expensive though it excels in solderability.

2. Phosphor bronze brazing filler

Phosphor bronze brazing filler is generally used to join copper or copper alloy.

3. Low temperature brazing filler

Low temperature brazing filler is generally called solder, and is an alloy of tin and lead. Since it is weak in adhesive strength, do not use it for refrigerant pipes.

1. Phosphor bronze brazing filler tends to react with sulfur and produce a fragile compound water solution, which may cause a gas leakage. Therefore, use any other type of brazing filler at a hot spring resort, etc., and coat the surface with a paint.
2. When performing brazing again at time of servicing, use the same type of brazing filler.

3-5-2. Flux

1. Reason why flux is necessary

- By removing the oxide film and any foreign matter on the metal surface, it assists the flow of brazing filler.
- In the brazing process, it prevents the metal surface from being oxidized.
- By reducing the brazing filler's surface tension, the brazing filler adheres better to the treated metal.

2. Characteristics required for flux

- Activated temperature of flux coincides with the brazing temperature.
- Due to a wide effective temperature range, flux is hard to carbonize.
- It is easy to remove slag after brazing.
- The corrosive action to the treated metal and brazing filler is minimum.
- It excels in coating performance and is harmless to the human body.

As the flux works in a complicated manner as described above, it is necessary to select an adequate type of flux according to the type and shape of treated metal, type of brazing filler and brazing method, etc.

3. Types of flux

- **Noncorrosive flux**

  Generally, it is a compound of borax and boric acid.
  It is effective in case where the brazing temperature is higher than 800°C.

- **Activated flux**

  Most of fluxes generally used for silver brazing are this type.
  It features an increased oxide film removing capability due to the addition of compounds such as potassium fluoride, potassium chloride and sodium fluoride to the borax-boric acid compound.

4. Piping materials for brazing and used brazing filler/flux

Piping material	Used brazing filler	Used flux
Copper - Copper	Phosphor copper	Do not use
Copper - Iron	Silver	Paste flux
Iron - Iron	Silver	Vapor flux

1. Do not enter flux into the refrigeration cycle.
2. When chlorine contained in the flux remains within the pipe, the lubricating oil deteriorates. Therefore, use a flux which does not contain chlorine.
3. When adding water to the flux, use water which does not contain chlorine (e.g. distilled water or ion-exchange water).
4. Remove the flux after brazing.

3-5-3. Brazing

As brazing work requires sophisticated techniques, experiences based upon a theoretical knowledge, it must be performed by a person qualified.

In order to prevent the oxide film from occurring in the pipe interior during brazing, it is effective to proceed with brazing while letting dry Nitrogen gas (N2) flow.

Never use gas other than Nitrogen gas.

1. Brazing method to prevent oxidation

1) Attach a reducing valve and a flow-meter to the Nitrogen gas cylinder.
2) Use a copper pipe to direct the piping material, and attach a flow-meter to the cylinder.
3) Apply a seal onto the clearance between the piping material and inserted copper pipe for Nitrogen in order to prevent backflow of the Nitrogen gas.
4) When the Nitrogen gas is flowing, be sure to keep the piping end open.
5) Adjust the flow rate of Nitrogen gas so that it is lower than 0.05 m^3/Hr or 0.02 MPa (0.2kgf/cm^2) by means of the reducing valve.
6) After performing the steps above, keep the Nitrogen gas flowing until the pipe cools down to a certain extent (temperature at which pipes are touchable with hands).
7) Remove the flux completely after brazing.

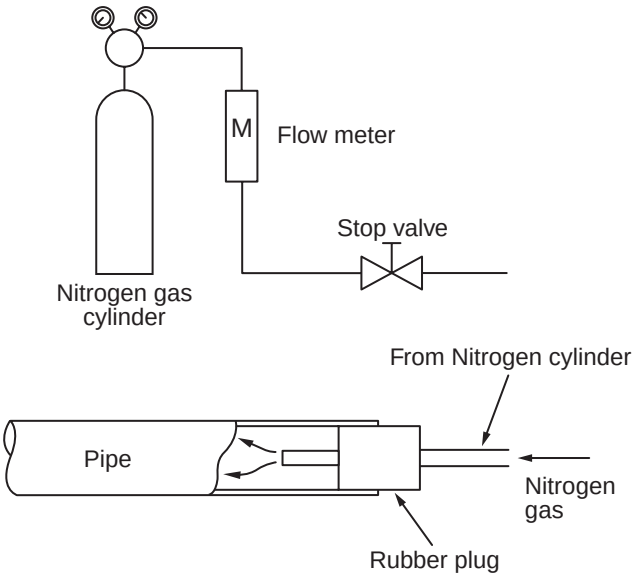

Fig. 3-5-1
Prevention of oxidation during brazing

4. CONSTRUCTION VIEWS

4-1. Indoor Unit

RAS-B10SKVP-E, RAS-B13SKVP-E, RAS-B16SKVP-E

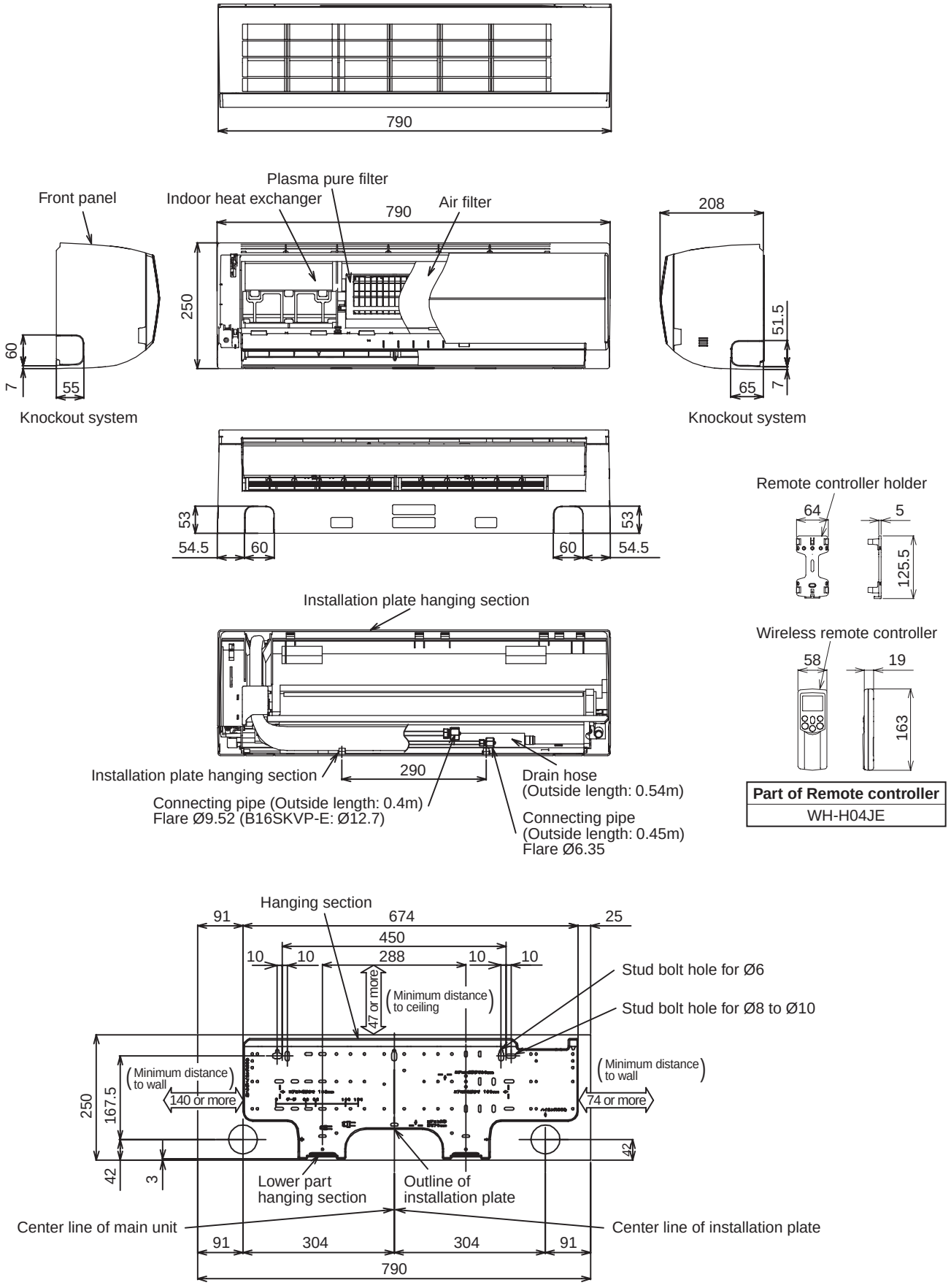

Part of Remote controller
WH-H04JE

RAS-10SKVP-ND, RAS-13SKVP-ND, RAS-16SKVP-ND

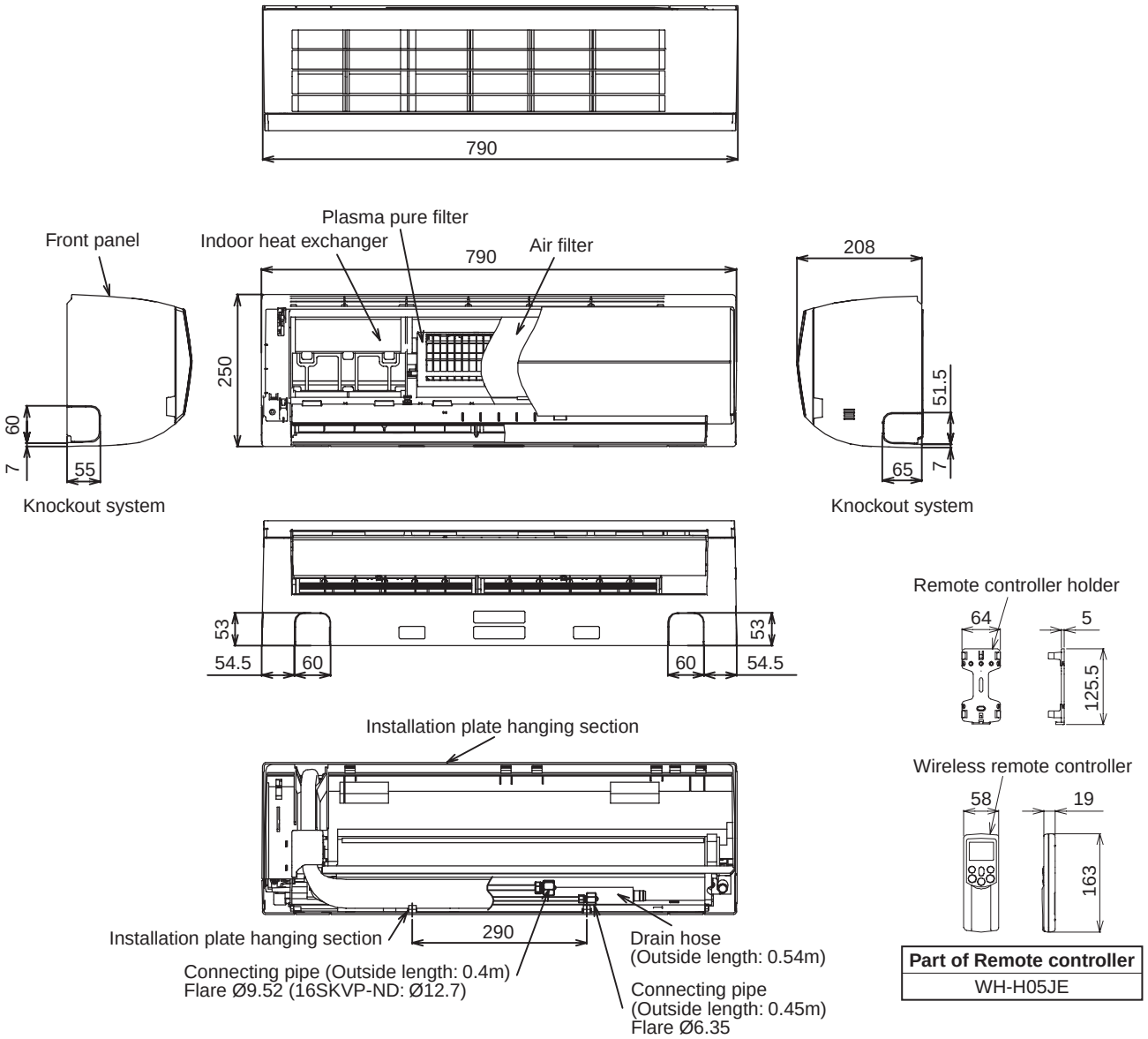

Part of Remote controller
WH-H05JE

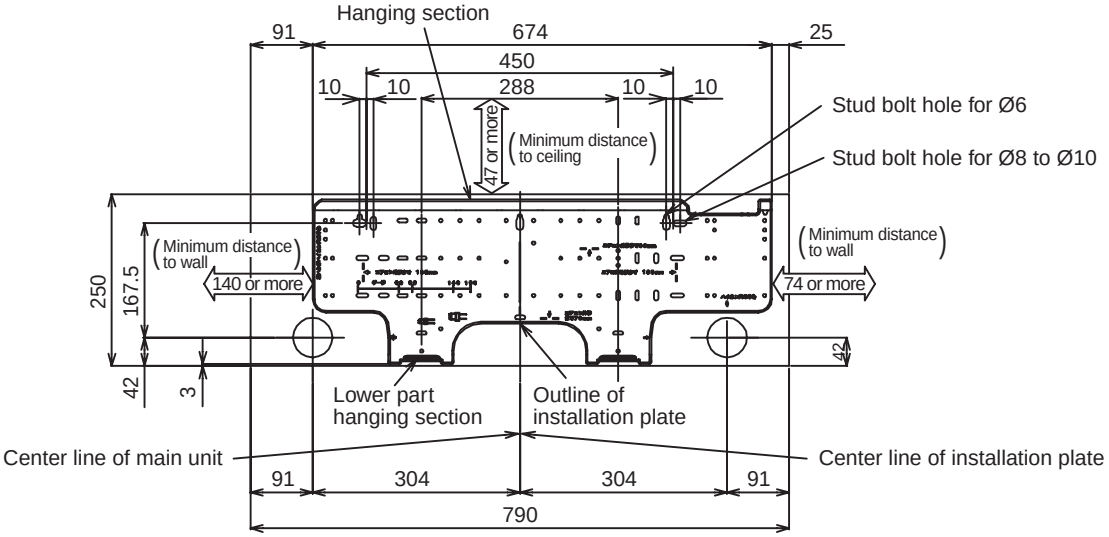

4-2. Outdoor Unit

RAS-10SAVP-E, RAS-13SAVP-E, RAS-16SAVP-E, RAS-10SAVP-ND, RAS-13SAVP-ND, RAS-16SAVP-ND

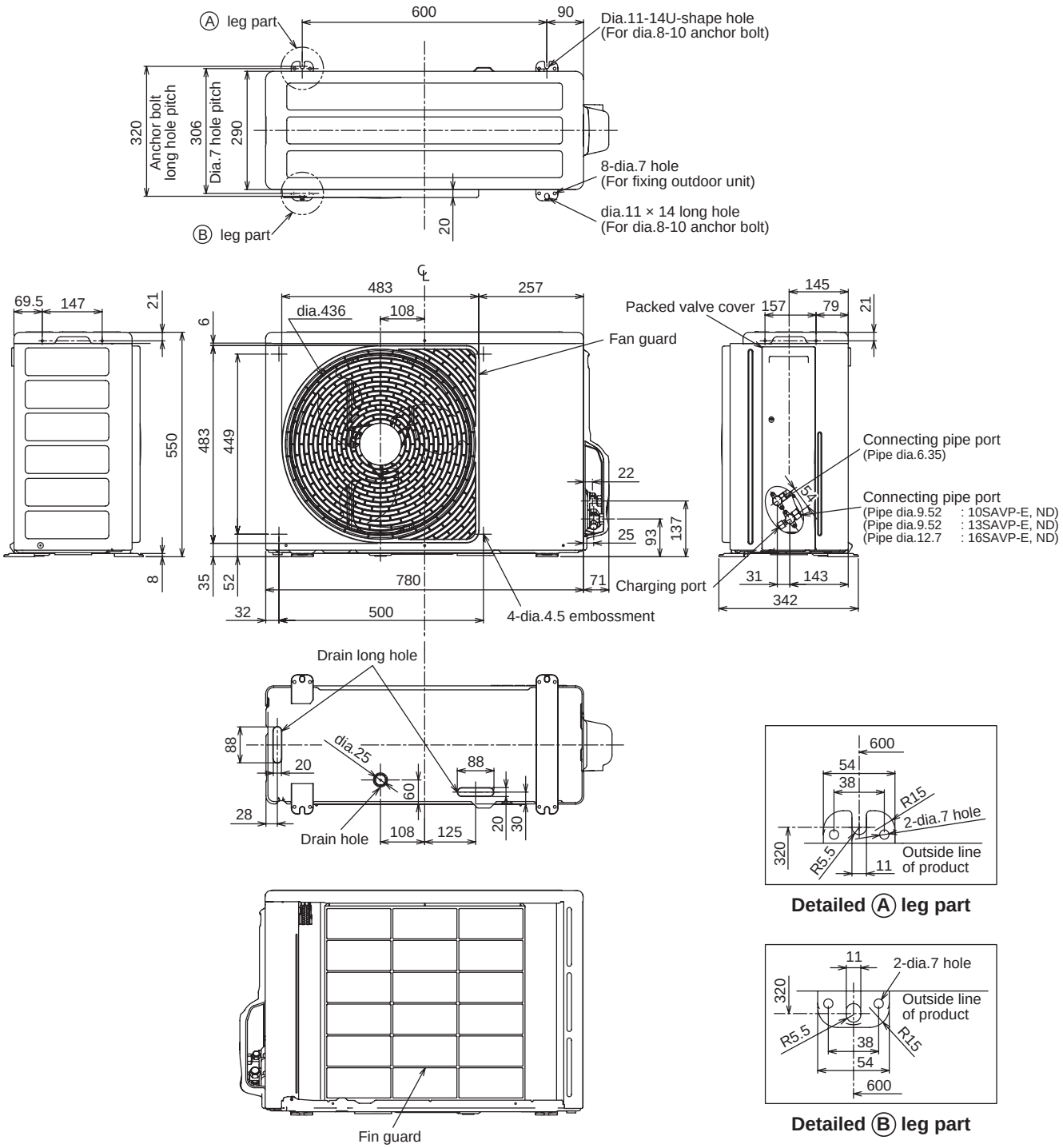

Mounting dimensions of anchor bolt

When iastalling the outdoor unit, Leave open in at least two of directions (A), (B), (C) and (D) shown in the figure below.

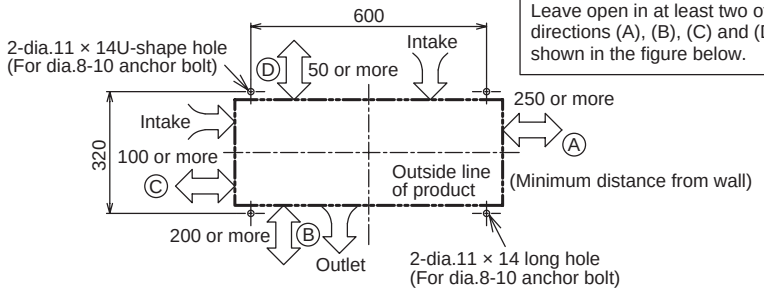

Unit : mm

5. WIRING DIAGRAM

5-1. Outdoor Unit

RAS-10SAVP-E, RAS-13SAVP-E, RAS-16SAVP-E

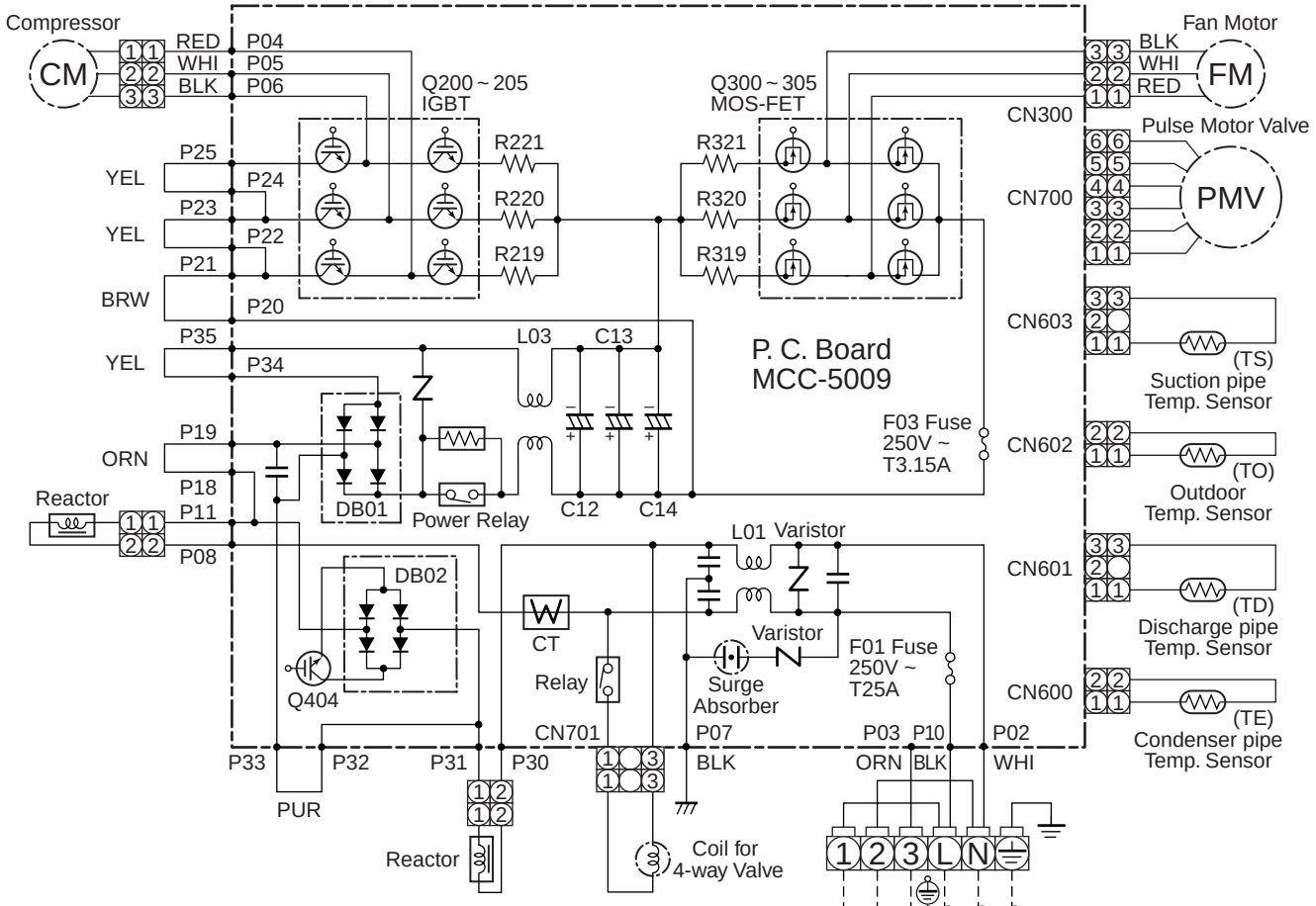

5-2. Indoor Unit

RAS-B10SKVP-E,
RAS-B13SKVP-E,
RAS-B16SKVP-E

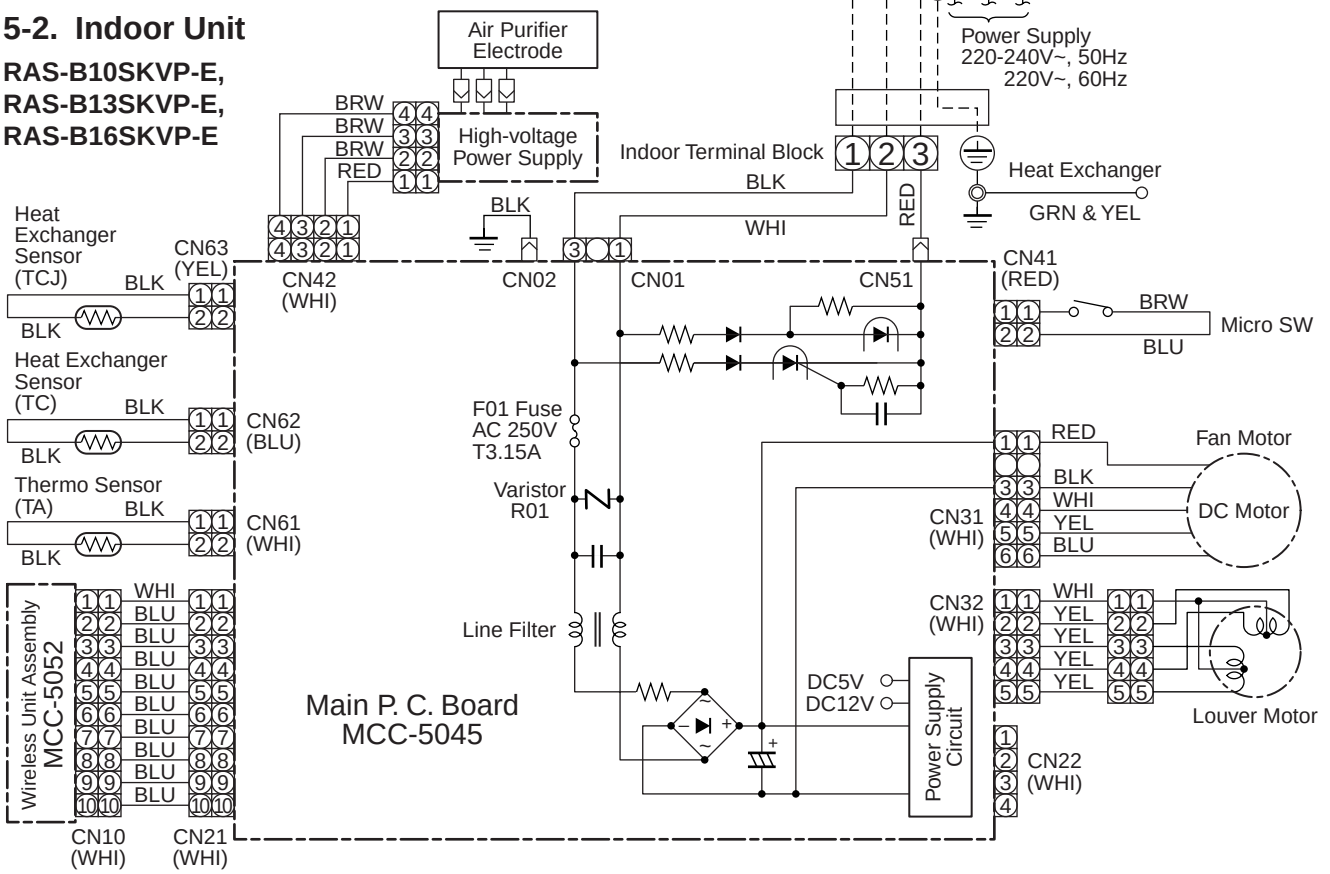

5-3. Outdoor Unit

RAS-10SAVP-ND, RAS-13SAVP-ND, RAS-16SAVP-ND

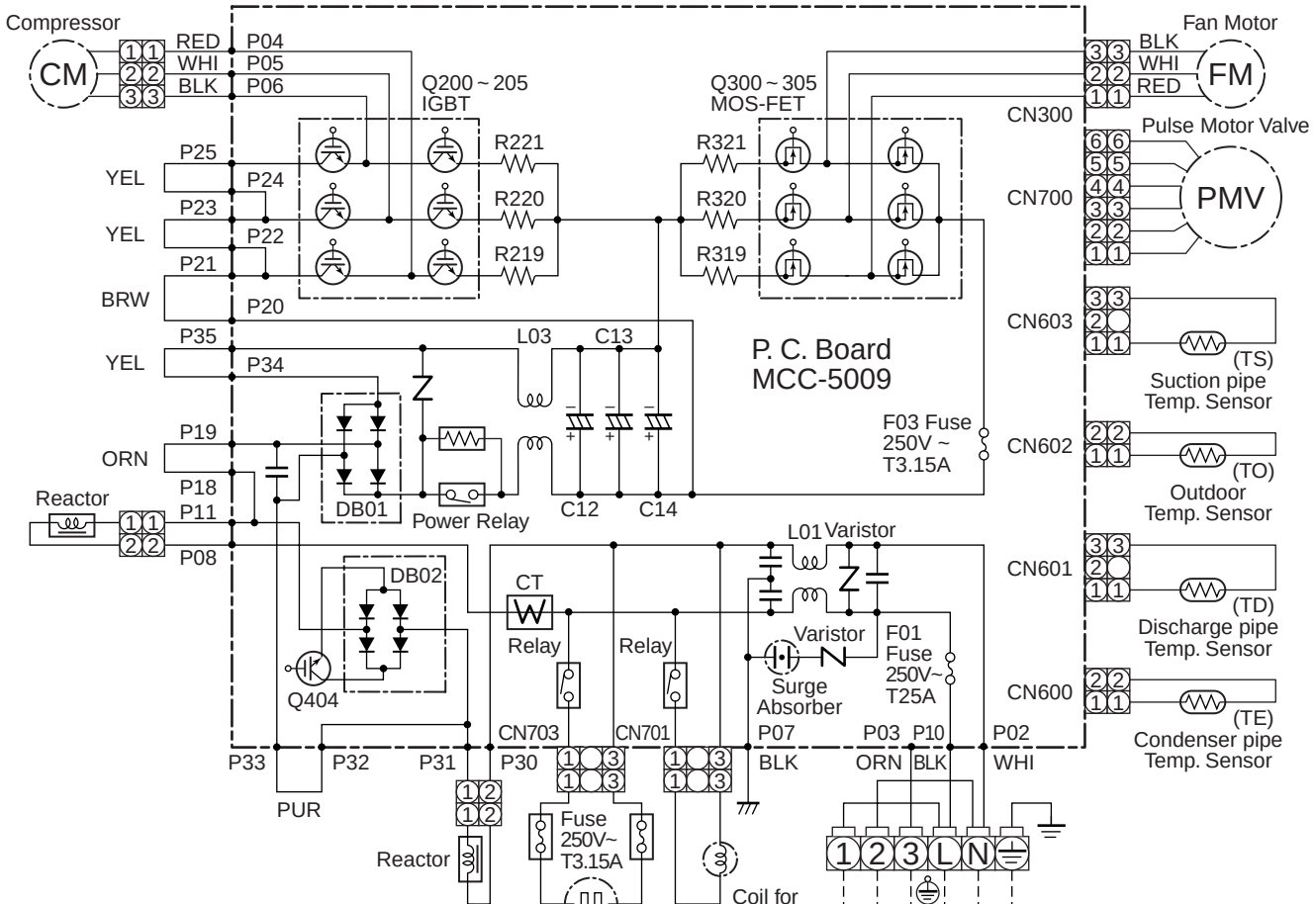

5-4. Indoor Unit

RAS-10SKVP-ND,
RAS-13SKVP-ND,
RAS-16SKVP-ND

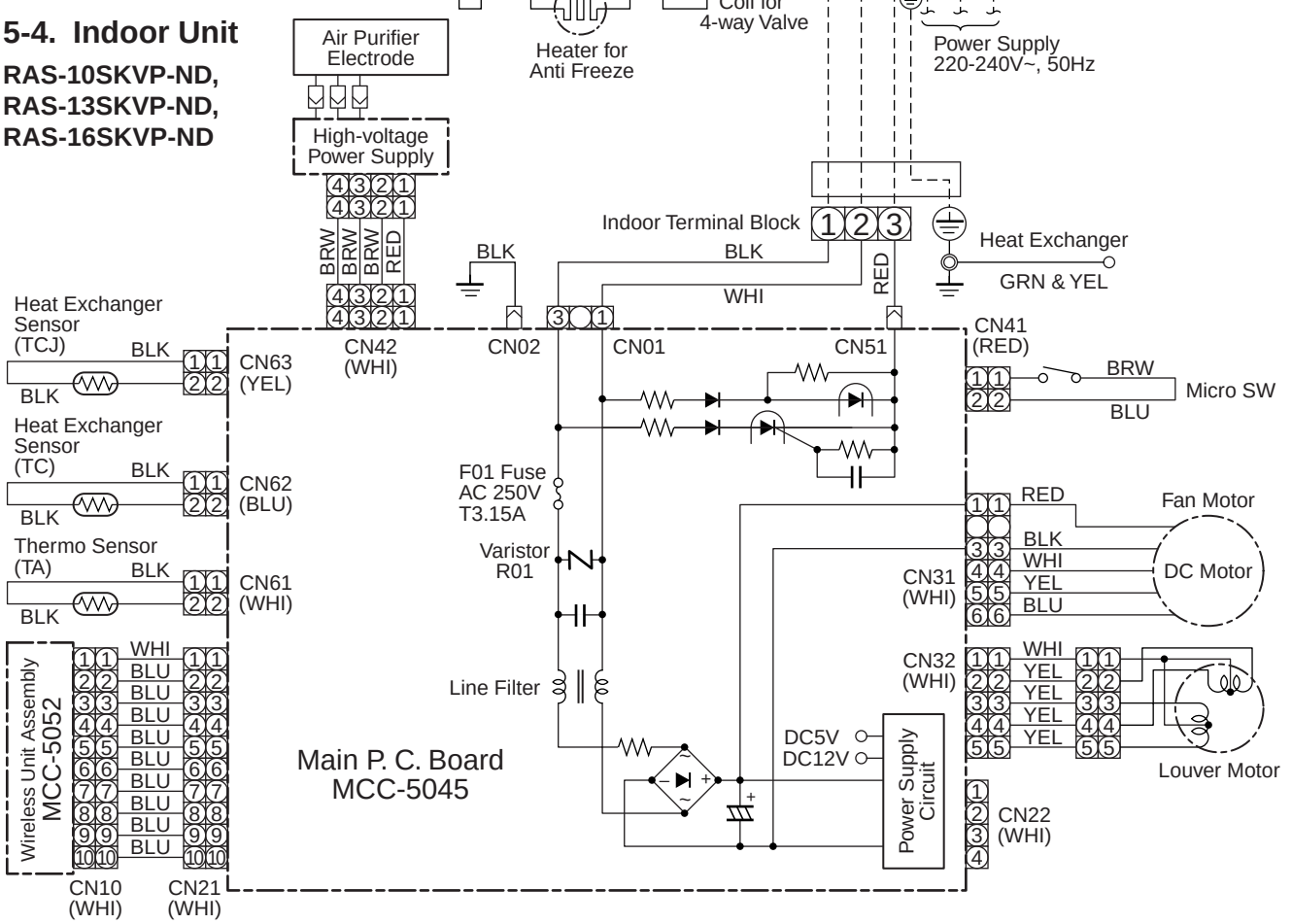

6. SPECIFICATIONS OF ELECTRICAL PARTS

6-1. Indoor Unit

RAS-B10SKVP-E, RAS-B13SKVP-E, RAS-B16SKVP-E
RAS-10SKVP-ND, RAS-13SKVP-ND, RAS-16SKVP-ND

No.	Parts name	Type	Specifications
1	Fan motor (for indoor)	MF-280-30-5R	DC280–340V, 30W
2	Room temp. sensor (TA-sensor)	(–)	10kΩ at 25°C
3	Heat exchanger temp. sensor (TC-sensor)	(–)	10kΩ at 25°C
4	Heat exchanger temp. sensor (TCJ-sensor)	(–)	10kΩ at 25°C
5	Louver motor	MP24Z3N	Output (Rated) 1W, 16 poles, DC12V

6-2. Outdoor Unit

RAS-10SAVP-E, RAS-13SAVP-E, RAS-16SAVP-E
RAS-10SAVP-ND, RAS-13SAVP-ND, RAS-16SAVP-ND

No.	Parts name	Model name	Rating
1	Reactor	CH-57	L = 10mH, 16A
2	Outside fan motor	ICF-140-43-4R	DC140V, 43W
3	Suction temp. sensor (TS sensor)	(Inverter attached)	10kΩ (25°C)
4	Discharge temp. sensor (TD sensor)	(Inverter attached)	62kΩ (20°C)
5	Outside air temp. sensor (TO sensor)	(Inverter attached)	10kΩ (25°C)
6	Heat exchanger temp. sensor (TE sensor)	(Inverter attached)	10kΩ (25°C)
7	Terminal block (6P)	——	20A, AC250V
8	Compressor	DA111A1F-24F	3-phases 4-poles 750W
9	Coil for P.M.V.	CAM-MD12TF	DC12V
10	Coil for 4-way valve	STF	AC220–240V
11	Cord heater assembly (-ND model only)	CSC-2	AC230V, 75W
12	Heater fuse assembly (-ND model only)	——	AC250V, 3.15A

7. REFRIGERANT CYCLE DIAGRAM

7-1. Refrigerant Cycle Diagram

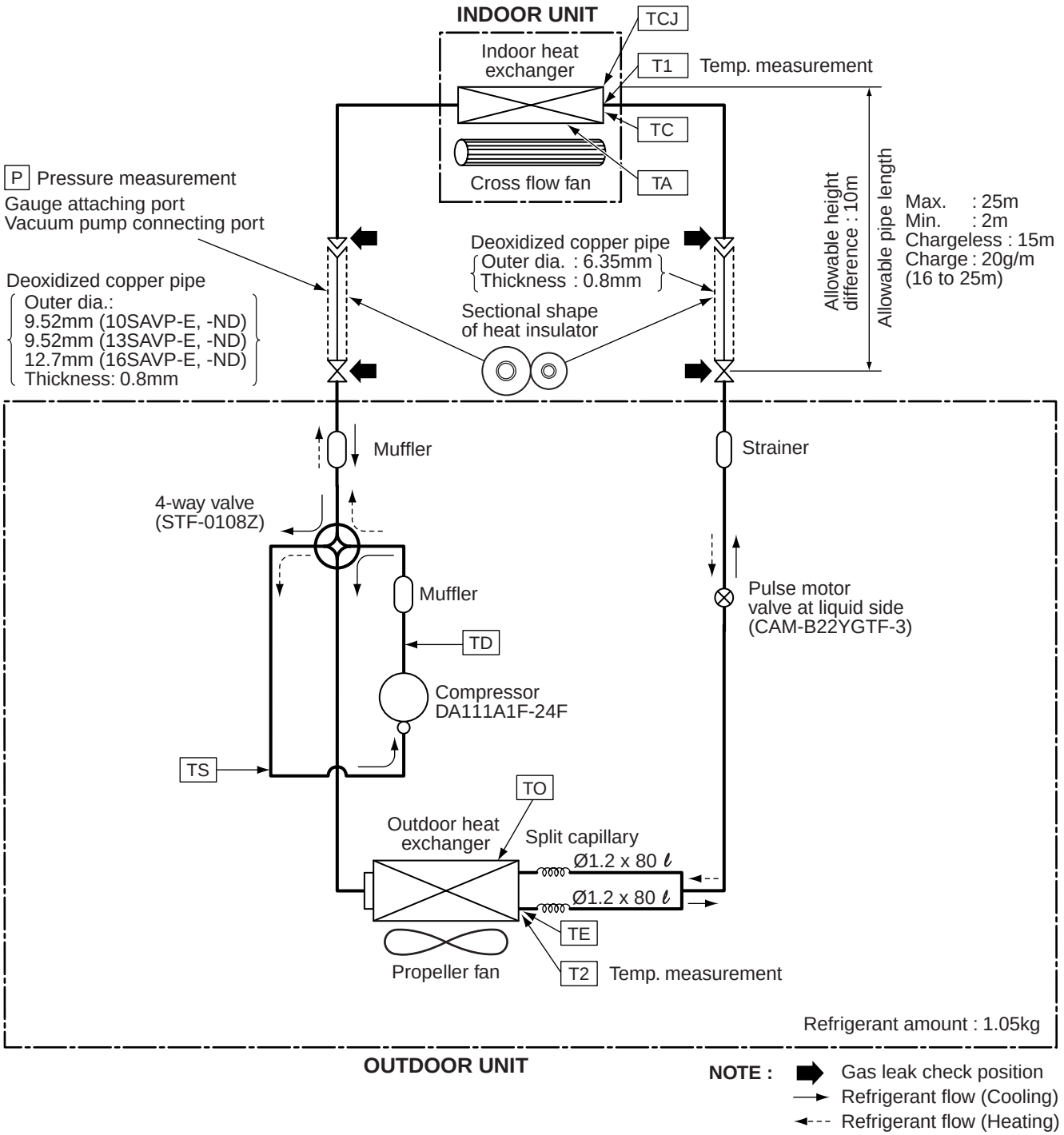

NOTE :

- The maximum pipe length of this air conditioner is 25 m. When the pipe length exceeds 15m, the additional charging of refrigerant, 20g per 1m for the part of pipe exceeded 15m is required. (Max. 200g)

7-2. Operation Data

<Cooling>

Temperature condition (°C)		Model name RAS-	Standard pressure P (MPa)	Heat exchanger pipe temp.		Indoor fan mode	Outdoor fan mode	Compressor revolution (rps)
Indoor	Outdoor			T1 (°C)	T2 (°C)			
27/19	35/–	B10SKVP-E 10SKVP-ND	1.0 to 1.2	13 to 15	36 to 39	High	High	35
		B13SKVP-E 13SKVP-ND	0.9 to 1.1	10 to 13	37 to 39	High	High	56
		B16SKVP-E 16SKVP-ND	0.8 to 1.0	8 to 11	37 to 40	High	High	82

<Heating>

Temperature condition (°C)		Model name RAS-	Standard pressure P (MPa)	Heat exchanger pipe temp.		Indoor fan mode	Outdoor fan mode	Compressor revolution (rps)
Indoor	Outdoor			T1 (°C)	T2 (°C)			
20/–	7/6	B10SKVP-E 10SKVP-ND	2.1 to 2.3	37 to 39	3 to 5	High	High	46
		B13SKVP-E 13SKVP-ND	2.4 to 2.6	41 to 44	2 to 4	High	High	62
		B16SKVP-E 16SKVP-ND	2.8 to 3.0	48 to 50	2 to 4	High	High	85

NOTES :

1. Measure surface temperature of heat exchanger pipe around center of heat exchanger path U bent. (Thermistor themometer)
2. Connecting piping condition : 5 m

8. CONTROL BLOCK DIAGRAM

8-1. Indoor Unit

RAS-B10SKVP-E, RAS-B13SKVP-E, RAS-B16SKVP-E / RAS-10SKVP-ND, RAS-13SKVP-ND, RAS-16SKVP-ND

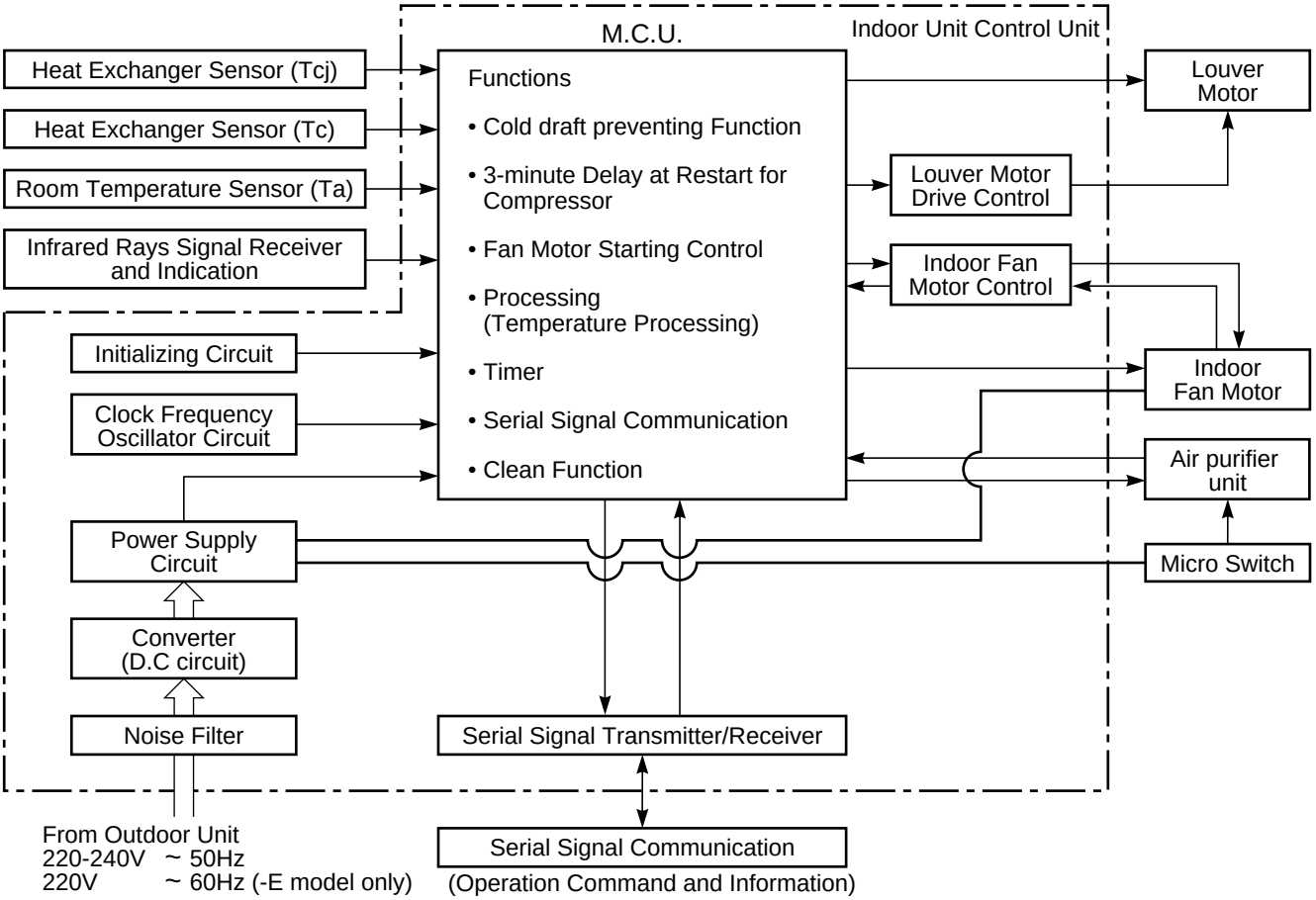

REMOTE CONTROLLER

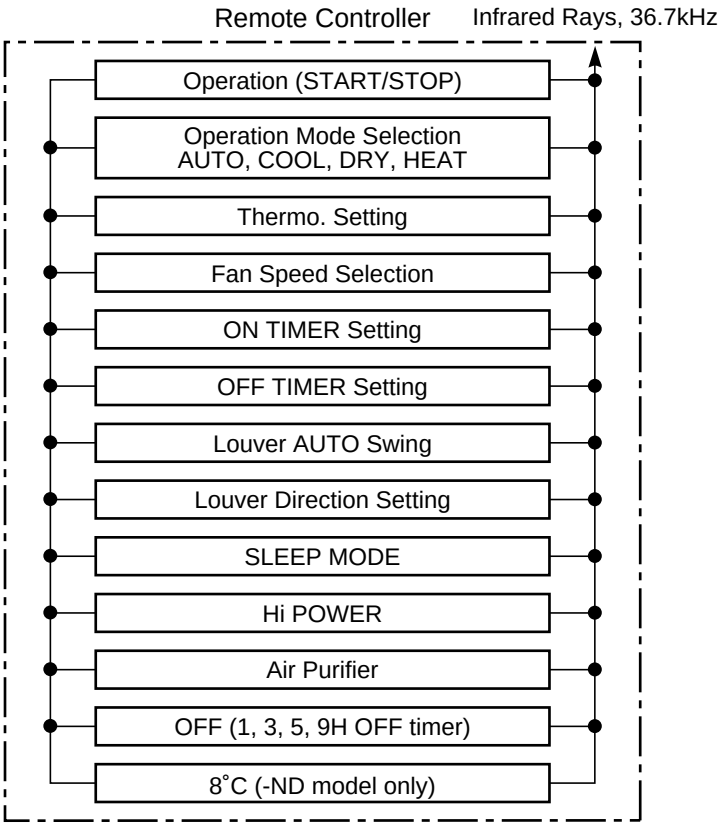

8-2. Outdoor Unit (Inverter Assembly)

RAS-10SAVP-E, RAS-13SAVP-E, RAS-16SAVP-E
RAS-10SAVP-ND, RAS-13SAVP-ND, RAS-16SAVP-ND

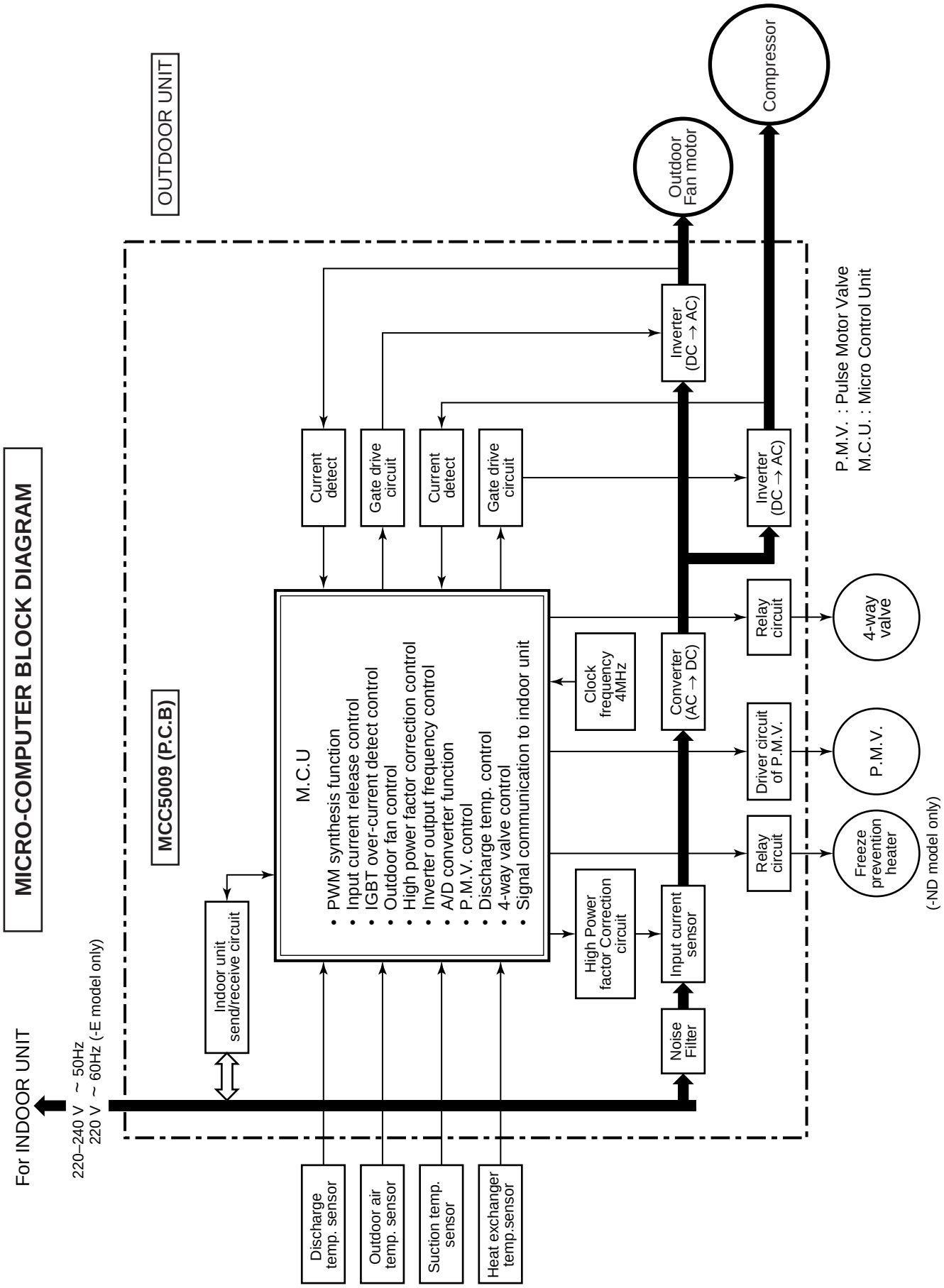

9. OPERATION DESCRIPTION

9-1. Outline of Air Conditioner Control

This air conditioner is a capacity-variable type air conditioner, which uses DC motor for the indoor fan motor and the outdoor fan motor. And the capacity-proportional control compressor which can change the motor speed in the range from 11 to 118 rps is mounted. The DC motor drive circuit is mounted to the indoor unit. The compressor and the inverter to control fan motor are mounted to the outdoor unit.

The entire air conditioner is mainly controlled by the indoor unit controller.

The indoor unit controller drives the indoor fan motor based upon command sent from the remote controller, and transfers the operation command to the outdoor unit controller.

The outdoor unit controller receives operation command from the indoor unit side, and controls the outdoor fan and the pulse motor valve. (P.M.V)
Besides, detecting revolution position of the compressor motor, the outdoor unit controller controls speed of the compressor motor by controlling output voltage of the inverter and switching timing of the supply power (current transfer timing) so that motors drive according to the operation command.
And then, the outdoor unit controller transfers reversely the operating status information of the outdoor unit to control the indoor unit controller.

As the compressor adopts four-pole brushless DC motor, the frequency of the supply power from inverter to compressor is two-times cycles of the actual number of revolution.

1. Role of indoor unit controller

The indoor unit controller judges the operation commands from the remote controller and assumes the following functions.

- Judgment of suction air temperature of the indoor heat exchanger by using the indoor temp. sensor. (TA sensor)
- Judgment of the indoor heat exchanger temperature by using heat exchanger sensor (TC sensor) (Prevent-freezing control and super heat control, etc.)
- Judgment of inlet indoor heat exchanger temperature by using heat exchanger sensor (TCJ sensor) (Super heat control etc.)
- Louver motor control
- Indoor fan motor operation control
- LED (Light Emitting Diode) display control
- Transferring of operation command signal (Serial signal) to the outdoor unit
- Reception of information of operation status (Serial signal including outside temp. data) to the outdoor unit and judgment/display of error
- Air purifier operation control

2. Role of outdoor unit controller

Receiving the operation command signal (Serial signal) from the indoor unit controller, the outdoor unit performs its role.

- Compressor operation control
- Operation control of outdoor fan motor
- P.M.V. control
- 4-way valve control

} Operations followed to judgment of serial signal from indoor side.

- Detection of inverter input current and current release operation
- Over-current detection and prevention operation to IGBT module (Compressor stop function)
- Compressor and outdoor fan stop function when serial signal is off (when the serial signal does not reach the board assembly of outdoor control by trouble of the signal system)
- Transferring of operation information (Serial signal) from outdoor unit controller to indoor unit controller
- Detection of outdoor temperature and operation revolution control
- Defrost control in heating operation (Temp. measurement by outdoor heat exchanger and control for 4-way valve and outdoor fan)

3. Contents of operation command signal (Serial signal) from indoor unit controller to outdoor unit controller

The following three types of signals are sent from the indoor unit controller.

- Operation mode set on the remote controller
- Compressor revolution command signal defined by indoor temperature and set temperature (Correction along with variation of room temperature and correction of indoor heat exchanger temperature are added.)
- Temperature of indoor heat exchanger
- For these signals ([Operation mode] and [Compressor revolution] indoor heat exchanger temperature), the outdoor unit controller monitors the input current to the inverter, and performs the followed operation within the range that current does not exceed the allowable value.

4. Contents of operation command signal (Serial signal) from outdoor unit controller to indoor unit controller

The following signals are sent from the outdoor unit controller.

- The current operation mode
- The current compressor revolution
- Outdoor temperature
- Existence of protective circuit operation

  For transferring of these signals, the indoor unit controller monitors the contents of signals, and judges existence of trouble occurrence.

  Contents of judgment are described below.

  - Whether distinction of the current operation status meets to the operation command signal
  - Whether protective circuit operates

    When no signal is received from the outdoor unit controller, it is assumed as a trouble.

9-2. Operation Description

9-2. 1. Basic operation 29
1. Operation control 29
2. Cooling/Heating operation 30
3. AUTO operation 30
4. DRY operation 30
2. Indoor fan motor control 31
3. Outdoor fan motor control 33
4. Capacity control 34
5. Current release control 34
6. Release protective control by temperature of indoor heat exchanger 35
7. Quick heating control 36
8. Defrost control (Only in heating operation) 36
9. Louver control 37
1) Louver position 37
2) Air direction adjustment 37
3) Swing 37
10. SLEEP MODE operation 38
11. Temporary operation 39
12. Air purifying control [Detection of abnormality] 39
13. Discharge temperature control 40
14. Pulse motor valve (P.M.V.) control 41
15. Clean operation 42
16. Clean operation release 43
17. Select switch on remote controller 44
18. Set temp. correction 45
19. Outdoor Quiet control 46
20. 8°C HEAT operation (-ND model only) 47
21. Cord heater control (-ND model only) 49

9-3. Auto Restart Function 50
9-3-1. How to Set the Auto Restart Function 50
9-3-2. How to Cancel the Auto Restart Function 51
9-3-3. Power Failure During Timer Operation 51

9-4. FILTER Indicator 51
9-4-1. How to Turn Off FILTER Indicator 51

9-5. Remote Controller and Its Fuctions 52
9-5-1. Parts Name of Remote Controller 52
9-5-2. Name and Functions of Indications on Remote Controller 53

9-6. Hi POWER Mode ([Hi POWER] button on the remote controller is pushed) 54

Item	Operation flow and applicable data, etc.	Description
1. Basic operation	**1. Operation control** Receiving the user's operation condition setup, the operation statuses of indoor/outdoor units are controlled. 1) The operation conditions are selected by the remote controller as shown in the below. 2) A signal is sent by ON button of the remote controller. 3) The signal is received by a sensor of the indoor unit and processed by the indoor controllers as shown in the below. 4) The indoor controller controls the indoor fan motor and louver motor. 5) The indoor controller sends the operation command to the outdoor controller, and sends/receives the control status with a serial signal. 6) The outdoor controller controls the operation as shown in the left, and also controls the compressor, outdoor fan motor, 4-way valve and pulse motor valve.	

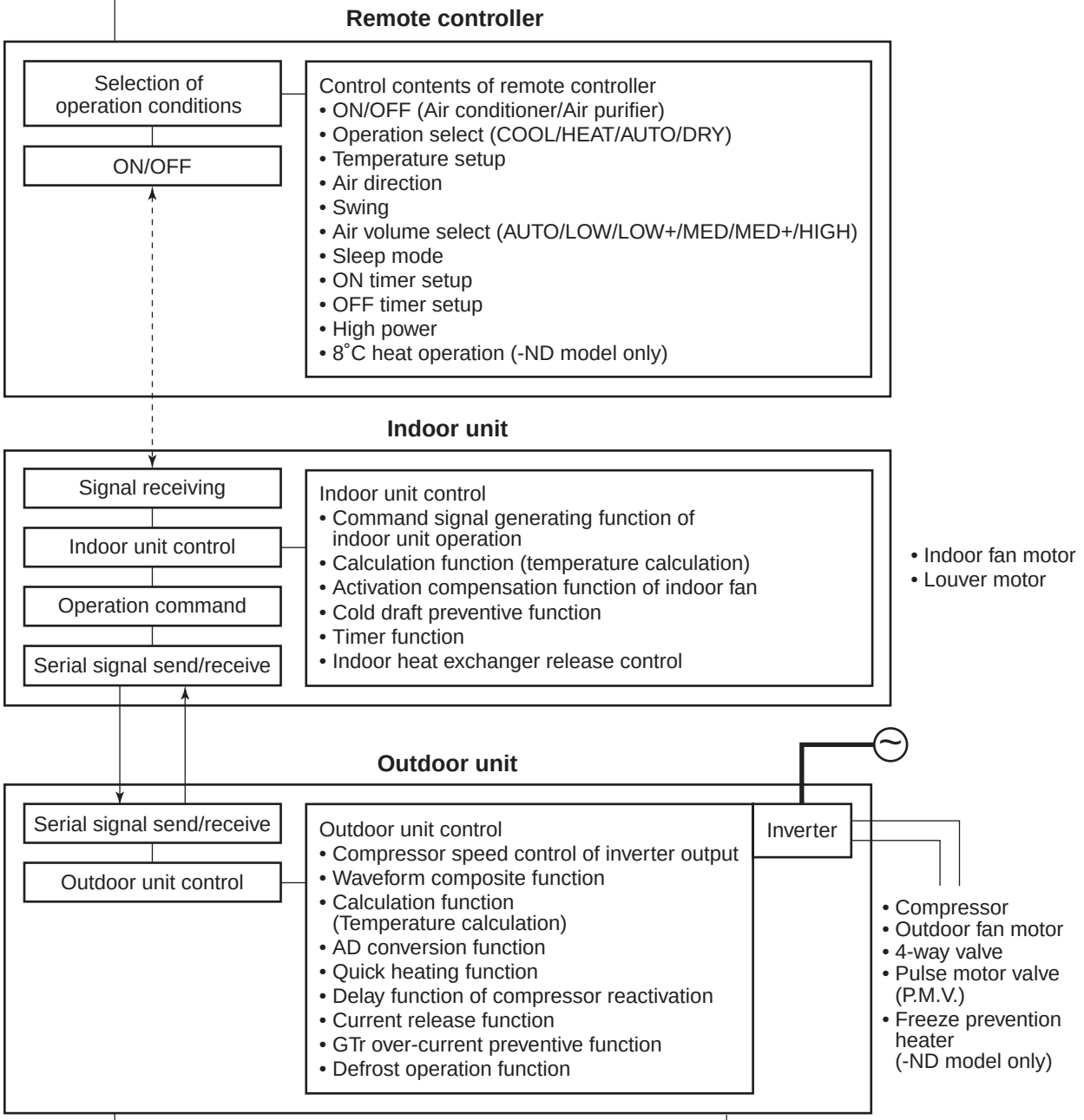

Item	Operation flow and applicable data, etc.	Description
1. Basic operation	**2. Cooling/Heating operation** The operations are performed in the following parts by controls according to cooling/heating conditions. 1) Receiving the operation ON signal of the remote controller, the cooling or heating operation signal starts being transferred form the indoor controller to the outdoor unit. 2) At the indoor unit side, the indoor fan is operated according to the contents of "**2. Indoor fan motor control**" and the louver according to the contents of "**9. Louver control**", respectively. 3) The outdoor unit controls the outdoor fan motor, compressor, pulse motor valve and 4-way valve according to the operation signal sent from the indoor unit. 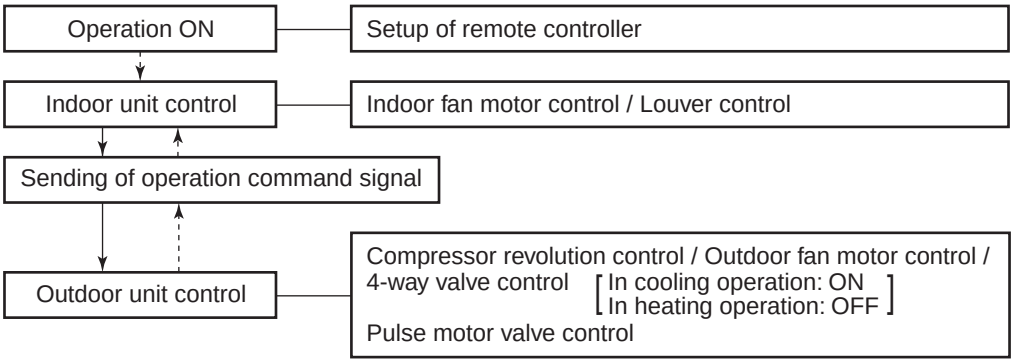 	
	3. AUTO operation Selection of operation mode As shown in the following figure, the operation starts by selecting automatically the status of room temperature (Ta) when starting AUTO operation. *1. When reselecting the operation mode, the fan speed is controlled by the previous operation mode. 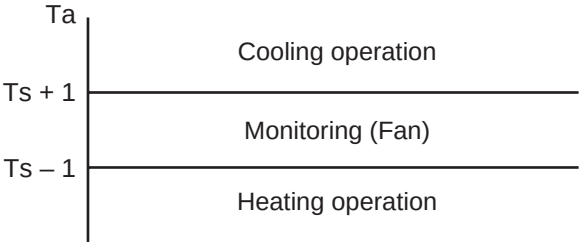 	1) Detects the room temperature (Ta) when the operation started. 2) Selects an operation mode from Ta in the left figure. 3) Fan operation continues until an operation mode is selected. 4) When AUTO operation has started within 2 hours after heating operation stopped and if the room temperature is 20°C or more, the fan operation is performed with "Super Ultra LOW" mode for 3 minutes. Then, select an operation mode. 5) If the status of compressor-OFF continues for 15 minutes the room temperature after selecting an operation mode (COOL/HEAT), reselect an operation mode.
	4. DRY operation DRY operation is performed according to the difference between room temperature and the setup temperature as shown below. In DRY operation, fan speed is controlled in order to prevent lowering of the room temperature and to avoid air flow from blowing directly to persons. 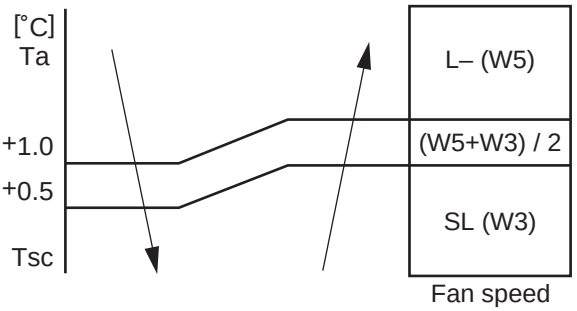 	1) Detects the room temperature (Ta) when the DRY operation started. 2) Starts operation under conditions in the left figure according to the temperature difference between the room temperature and the setup temperature (Tsc). Setup temperature (Tsc) = Set temperature on remote controller (Ts) + (0.0 to 1.0) 3) When the room temperature is lower 1°C or less than the setup temperature, turn off the compressor.

Item	Operation flow and applicable data, etc.	Description
2. Indoor fan motor control	**<In cooling operation>** (This operation controls the fan speed at indoor unit side.) The indoor fan (cross flow fan) is operated by the phase-control induction motor. The fan rotates in 5 stages in MANUAL mode, and in 5 stages in AUTO mode, respectively. (Table 1)	

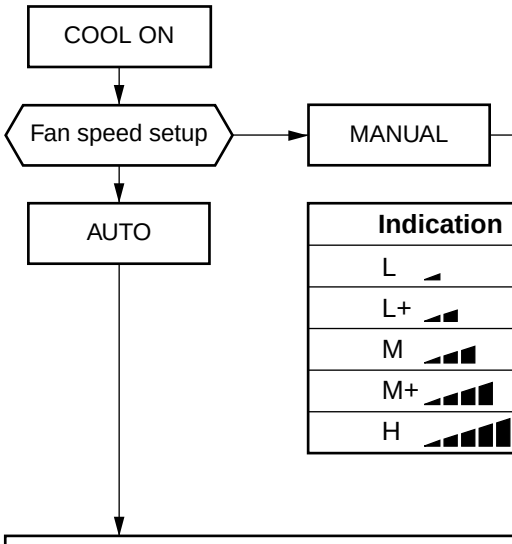

(Fig. 1)

Indication	Fan speed
L	W6
L+	(L + M) / 2
M	W9
M+	(M + H) / 2
H	WC

(Fig. 2)

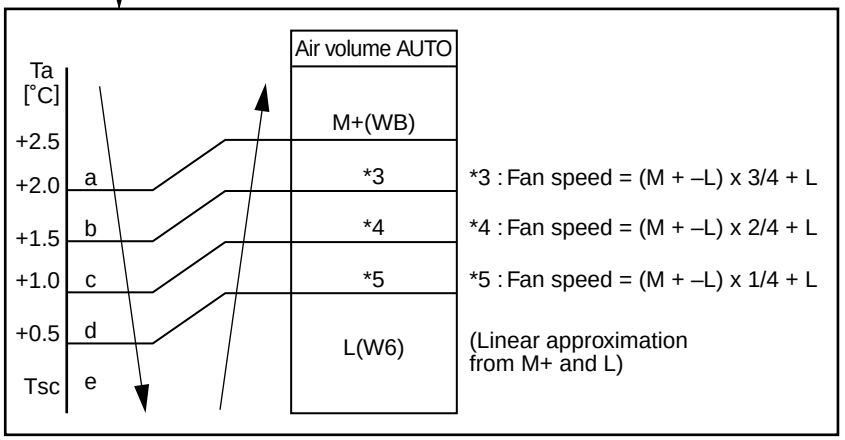

*** Symbols**

UH	: Ultra High
H	: High
M+	: Medium+
M	: Medium
L+	: Low+
L	: Low
L-	: Low–
UL	: Ultra Low
SUL	: Super Ultra Low

* The fan speed broadly varies due to position of the louver, etc. The described value indicates one under condition of inclining downward blowing.

1) When setting the fan speed to L, L+, M, M+ or H on the remote controller, the operation is performed with the constant speed shown in Fig. 1.
2) When setting the fan speed to AUTO on the remote controller, revolution of the fan motor is controlled to the fan speed level shown in Fig. 2 and Table 1 according to the setup temperature, room temperature, and heat exchanger temperature.

(Table 1) Indoor fan air flow rate

Fan speed level	COOL	HEAT	DRY	RAS-B10SKVP-E RAS-10SKVP-ND		RAS-B13SKVP-E RAS-13SKVP-ND		RAS-B16SKVP-E RAS-16SKVP-ND	
				Fan speed (rpm)	Air flow rate (m^3/h)	Fan speed (rpm)	Air flow rate (m^3/h)	Fan speed (rpm)	Air flow rate (m^3/h)
WF		UH		1630	695	1650	705	1650	705
WE		H		1480	615	1530	640	1580	670
WD	UH	M+		1400	575	1440	595	1550	650
WC	H			1350	550	1390	570	1500	625
WB	M+	M		1200	475	1240	495	1350	550
WA				1110	430	1150	450	1230	490
W9	M	L+		980	365	1010	380	1080	415
W8		L		910	325	910	325	970	355
W7	L+	L–	L+	900	320	900	320	960	350
W6	L		L	860	300	860	300	920	330
W5	L–	UL	L–	820	280	820	280	900	320
W4	UL		UL	730	235	730	235	790	265
W3	SUL		SUL	630	185	630	185	640	190
W2		SUL		600	170	600	170	600	170
W1				600	170	600	170	600	170

Item	Operation flow and applicable data, etc.	Description
2. Indoor fan motor control	**<In heating operation>**	1) When setting the fan speed to L, L+, M, M+ or H on the remote controller, the operation is performed with the constant speed shown in Fig. 3 and Table 1. 2) When setting the fan speed to AUTO on the remote controller, revolution of the fan motor is controlled to the fan speed level shown in Fig. 5 according to the set temperature and room temperature. 3) Min air flow rate is controlled by temperature of the indoor heat exchanger (Tc) as shown in Fig. 4. 4) Cold draft prevention, the fan speed is controlled by temperature of the indoor heat exchanger (Tc) as shown in Fig. 6.

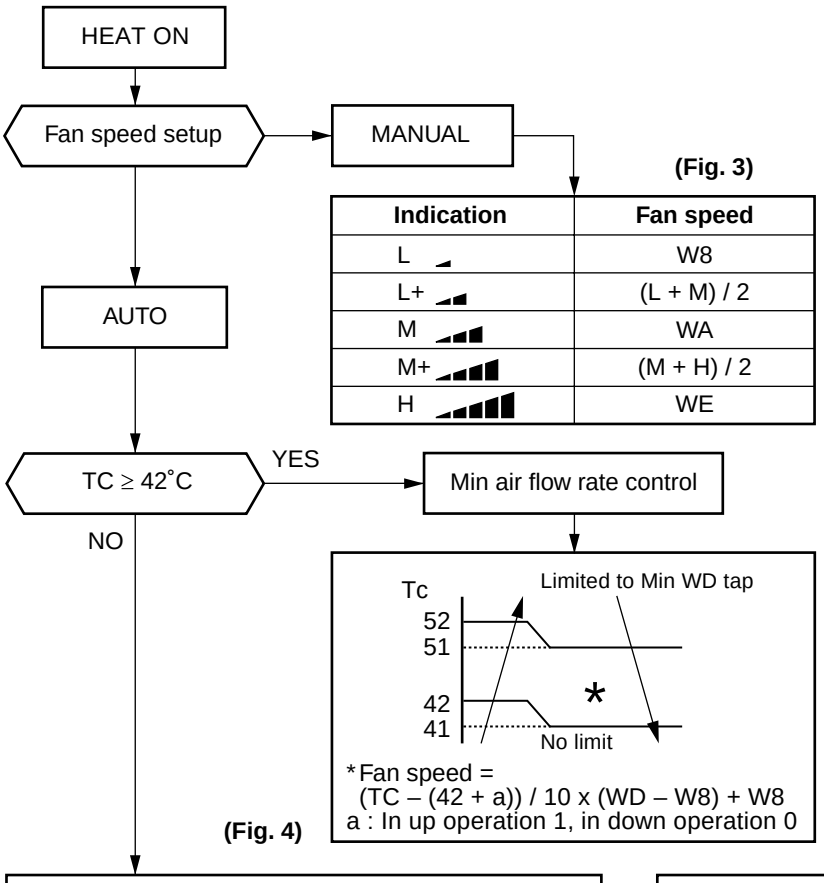

(Fig. 3)

Indication	Fan speed
L	W8
L+	(L + M) / 2
M	WA
M+	(M + H) / 2
H	WE

* Fan speed =
(TC – (42 + a)) / 10 x (WD – W8) + W8
a : In up operation 1, in down operation 0

(Fig. 4)

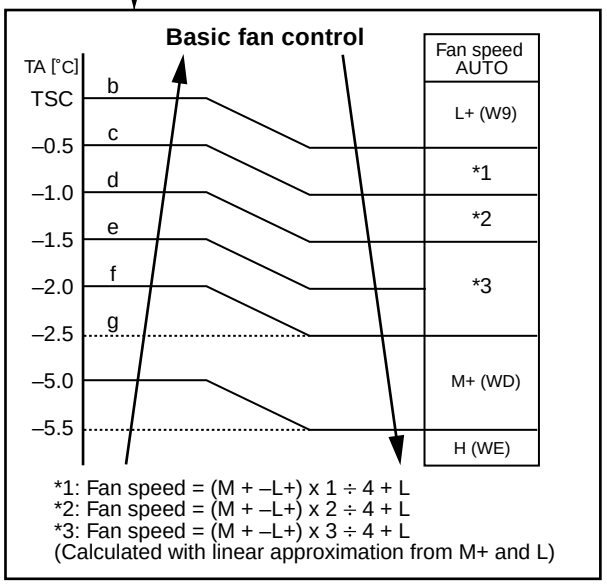

(Fig. 5)

Cold draft preventive control

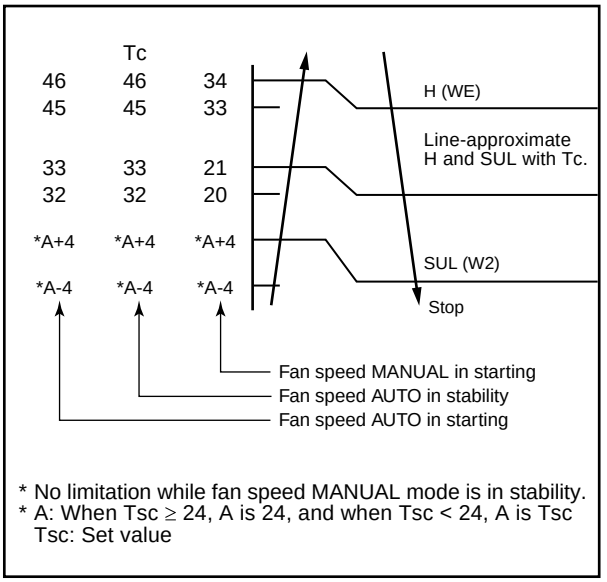

(Fig. 6)

[In starting and in stability]

	In starting	In stability
FAN AUTO	• Until 12 minutes passed after operation start • When 12 to 25 minutes passed after operation start and room temp. is 3°C or lower than set temp.	• When 12 to 25 minutes passed after operation start and room temp. is higher than (set temp. –3°C) • When 25 minutes or more passed after operation start
FAN Manual	• Room temp. < Set temp. –4°C	• Room temp. ≥ Set temp. –3.5°C

Item	Operation flow and applicable data, etc.	Description
3. Outdoor fan motor control	The blowing air volume at the outdoor unit side is controlled. Receiving the operation command from the controller of indoor unit, the controller of outdoor unit controls fan speed. * For the fan motor, a DC motor with non-stage variable speed system is used. However, it is limited to 16 stages for reasons of controlling.	1) The operation command sent from the remote controller is processed by the indoor unit controller and transferred to the controller of the outdoor unit. 2) When strong wind blows at outdoor side, the operation of air conditioner continues with the fan motor stopped. 3) Whether the fan is locked or not is detected, and the operation of air conditioner stops and an alarm is displayed if the fan is locked. 4) According to each operation mode, by the conditions of outdoor temperature (To) and compressor revolution, the speed of the outdoor fan shown in the table is selected.

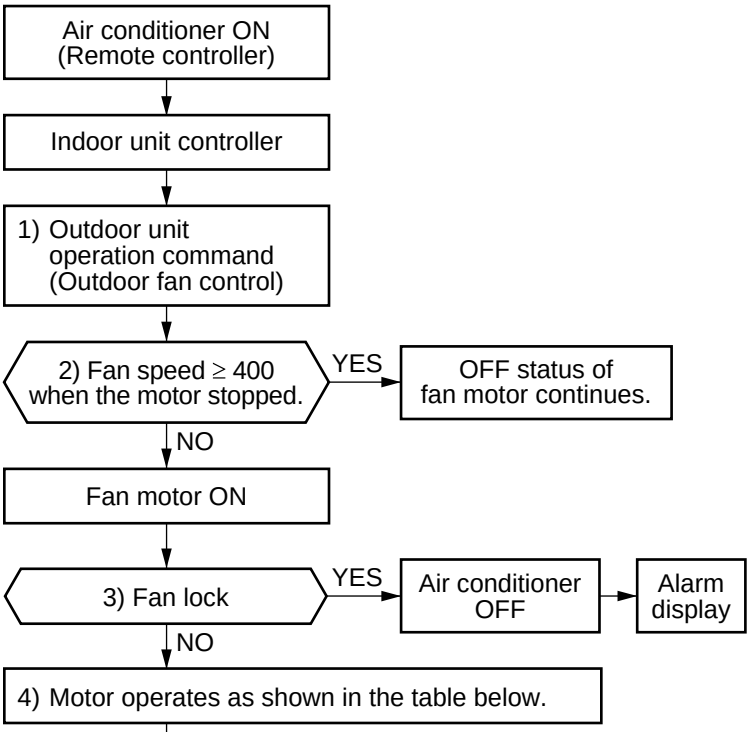

In cooling operation

Compressor speed (rps)		~ 13.8		~ 31.7		32.3 ~ MAX	
		MIN	MAX	MIN	MAX	MIN	MAX
To	To ≥ 38°C	f 2	f 3	f C	f D	f E	f F
	To ≥ 28°C	f 2	f 3	f B	f C	f E	f F
	To ≥ 15°C	f 2	f 3	f 8	f 9	f A	f B
	To ≥ 5.5°C	f 2	f 3	f 6	f 7	f 8	f 9
	To ≥ 0°C	f 1	f 2	f 4	f 5	f 6	f 7
During SLEEP MODE	To ≥ 38°C	f 2	f 3	f B	f C	f C	f D
	To < 38°C	f 2	f 3	f 2	f 3	f B	f C
When To is abnormal		f D	f F	f D	f F	f D	f F

In Heating operation

Compressor speed (rps)		~16.8	~47.9	48.5 ~ MAX
To	To ≥ 15°C	f 3	f 8	f 9
	To < 15°C	f 3	f 9	f A
	To < 5.5°C	f 8	f A	f D
	To < –5.0°C	f B	f C	f D
During SLEEP MODE	To ≥ 15°C	f 3	f 3	f 6
	To < 15°C	f 3	f 3	f 8
	To < 5.5°C	f 5	f 9	f 9
	To < –5.5°C	f 7	f A	f B
When To is abnormal		f A	f B	f D

Outdoor fan speed (rpm)

T ap	10SAVP-E 10SAVP-ND	13SAVP-E 13SAVP-ND	16SAVP-E 16SAVP-ND
f 1	200	200	200
f 2	300	300	300
f 3	390	390	390
f 4	450	450	450
f 5	500	500	500
f 6	500	500	500
f 7	600	600	650
f 8	600	600	650

T ap	10SAVP-E 10SAVP-ND	13SAVP-E 13SAVP-ND	16SAVP-E 16SAVP-ND
f 9	700	700	750
f A	700	700	750
f B	700	700	750
f C	700	700	750
f D	750	840	920
f E	750	840	920
f F	750	840	920

Item	Operation flow and applicable data, etc.	Description
4. Capacity control	The cooling or heating capacity depending on the load is adjusted. According to difference between the setup value of temperature and the room temperature, the capacity is adjusted by the compressor revolution.	1) The difference between set temperature on remote controller (Ts) and room temperature (Ta) is calculated. 2) According to the temperature difference, the correction value of Hz signal which determines the compressor speed is set up. 3) The rotating position and speed of the motor are detected by the electromotive force occurred on the motor winding with operation of the compressor. 4) According to the difference resulted from comparison of the correction value of Hz signal with the present operation Hz, the inverter output and the commutation timing are varied. 5) Change the compressor motor speed by outputting power to the compressor. * The contents of control operation are same in cooling operation and heating operation

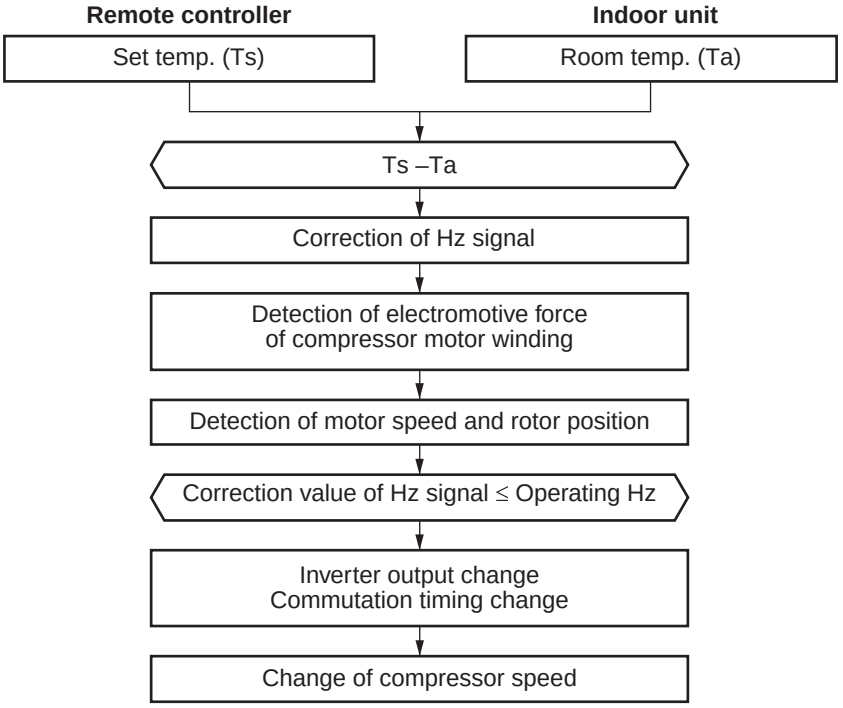

Item	Operation flow and applicable data, etc.	Description
5. Current release control	This function prevents troubles on the electronic parts of the compressor driving inverter. This function also controls drive circuit of the compressor speed so that electric power of the compressor drive circuit does not exceed the specified value.	1) The input current of the outdoor unit is detected in the inverter section of the outdoor unit. 2) According to the detected outdoor temperature, the specified value of the current is selected. 3) Whether the current value exceeds the specified value or not is judged. 4) If the current value exceeds the specified value, this function reduces the compressor speed and controls speed up to the closest one commanded from the indoor unit within the range which does not exceed the specified value.

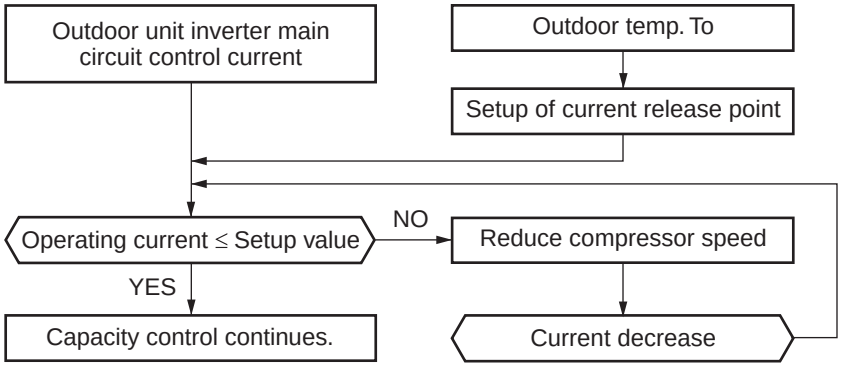

Outdoor temp.	Cooling current release value	Heating current release value
50°C ≤ TO	6.45A	7.72A
45°C ≤ TO < 50°C		
40°C ≤ TO < 45°C	6.75A	
16°C ≤ TO < 40°C	8.47A	
11°C ≤ TO < 16°C		9.22A
–5°C ≤ TO < 11°C		10.80A
TO < –5°C	6.90A	

Item	Operation flow and applicable data, etc.	Description
6. Release protective control by temperature of indoor heat exchanger	**<In cooling/dry operation>** (Prevent-freezing control for indoor heat exchanger) In cooling/dry operation, the sensor of indoor heat exchanger detects evaporation temperature and controls the compressor speed so that temperature of the heat exchanger does not exceed the specified value. 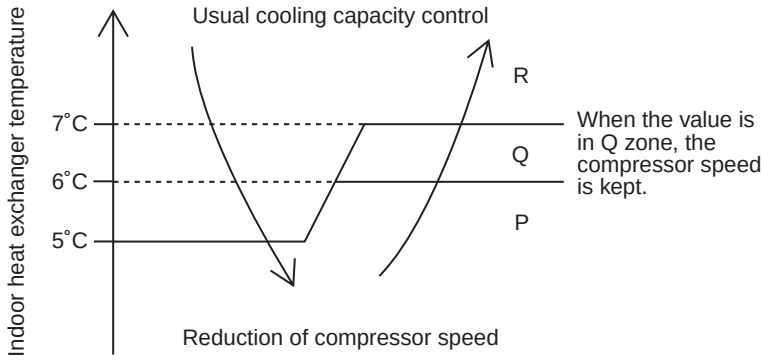 	1) When temperature of the indoor heat exchanger drops below 5°C, the compressor speed is reduced. (P zone) 2) When temperature of the indoor heat exchanger rises in the range from 6°C to under 7°C, the compressor speed is kept. (Q zone) 3) When temperature of the indoor heat exchanger rises to 7°C or higher, the capacity control operation returns to the usual control in cooling operation. (R zone)
	<In heating operation> (Prevent-overpressure control for refrigerating cycle) In heating operation, the sensor of indoor heat exchanger detects condensation temperature and controls the compressor speed so that temperature of the heat exchanger does not exceed the specified value. 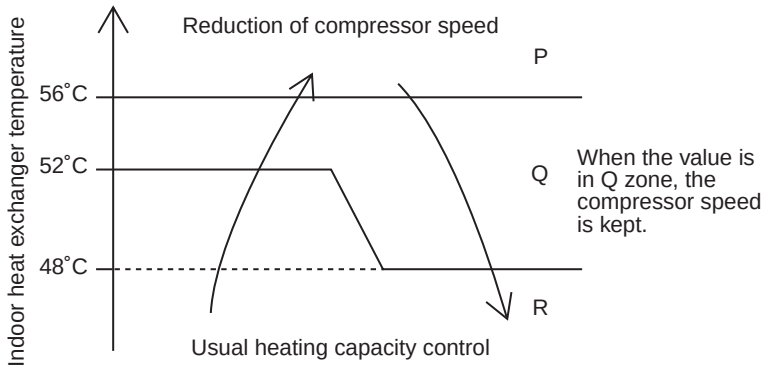 	1) When temperature of the indoor heat exchanger rises in the range from 52°C to 56°C, the compressor speed is kept. (Q zone) When temperature of the indoor heat exchanger drops in the range from 48°C to under 56°C, the compressor speed is kept. (Q zone) 2) When temperature of the indoor heat exchanger rises to 56°C or higher, the compressor speed is reduced. (P zone) 3) When temperature of the indoor heat exchanger does not rise to 52°C, or when it drops below to 48°C, the capacity control operation returns to the usual control in heating operation. (R zone)

Item	Operation flow and applicable data, etc.	Description
7. Quick heating control	This function quickens the starting of heating operation when indoor/outdoor temperature is low. (Available only in heating operation) When indoor temperature is low, this function stores the heat by heating winding depended on the outdoor temperature and then it enables the hot air blowing out quickly. 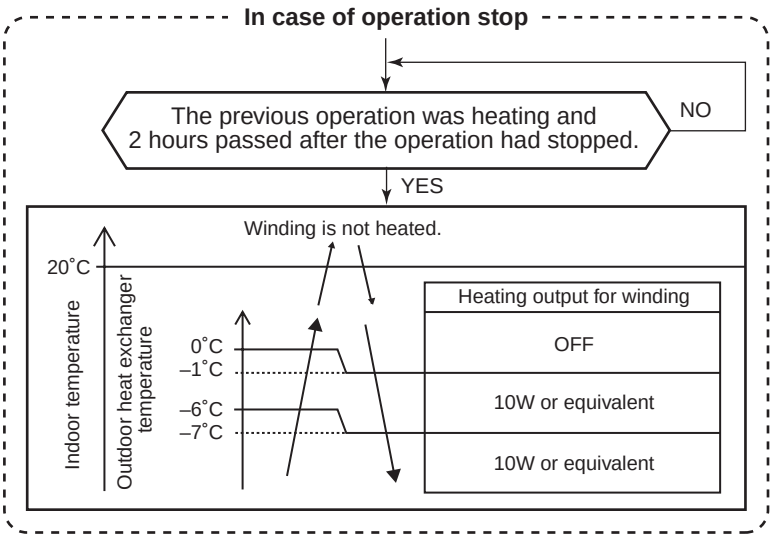 	When the following conditions are satisfied, winding is heated by output varied by the outdoor heat exchanger temperature. **Condition 1 :** The previous operation was heating. **Condition 2 :** 2 hours passed after operation stop. **Condition 3 :** The room temperature is 20°C or lower. The indoor temperature sensor detects the room temperature. If the detected room temperature is 20°C or lower, the outdoor heat exchanger temperature sensor detects the outdoor heat exchanger temperature. As shown in the left figure, winding of the compressor is heated for each division of the temperature (≒ for each outdoor temperature) and the heat is stored.
8. Defrost control (Only in heating operation)	(This function removes frost adhered to the outdoor heat exchanger.) The temperature sensor of the outdoor heat exchanger (Te sensor) judges the frosting status of the outdoor heat exchanger and the defrost operation is performed with 4-way valve reverse defrost system. 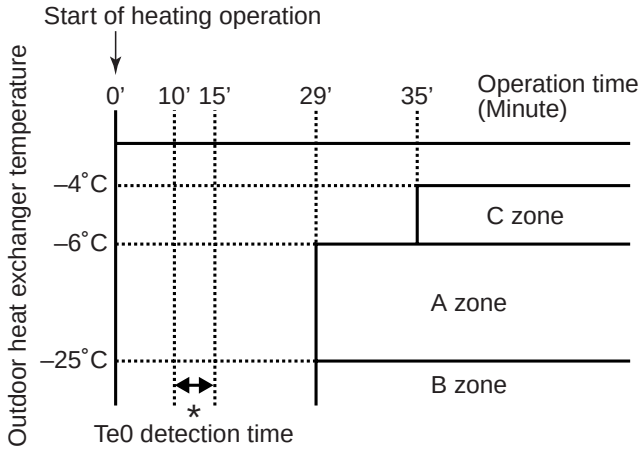 * The minimum value of Te sensor 10 to 15 minutes after start of operation is stored in memory as Te0. **Table 1** **A zone**: When Te0 - TE ≥ 2.5 continued for 2 minutes in A zone, defrost operation starts. **B zone**: When the operation continued for 2 minutes in B zone, defrost operation starts. **C zone**: When Te0 - TE ≥ 3 continued for 2 minutes in C zone, defrost operation starts.	The necessity of defrost operation is detected by the outdoor heat exchanger temperature. The conditions to detect the necessity of defrost operation differ in A, B, or C zone each. (Table 1) **<Defrost operation>** • Defrost operation in A to C zones 1) Stop operation of the compressor for 20 seconds. 2) Invert (ON) 4-way valve 10 seconds after stop of the compressor. 3) The outdoor fan stops at the same time when the compressor stops. 4) When temperature of the indoor heat exchanger becomes 38°C or lower, stop the indoor fan. **<Finish of defrost operation>** • Returning conditions from defrost operation to heating operation 1) Temperature of outdoor heat exchanger rises to +8°C or higher. 2) Temperature of outdoor heat exchanger is kept at +5°C or higher for 80 seconds. 3) Defrost operation continues for 15 minutes. **<Returning from defrost operation>** 1) Stop operation of the compressor for approx. 50 seconds. 2) Invert (OFF) 4-way valve approx. 40 seconds after stop of the compressor. 3) The outdoor fan starts rotating at the same time when the compressor starts.

Item	Operation flow and applicable data, etc.	Description
9. Louver control 1) Louver position	This function controls the air direction of the indoor unit. • The position is automatically controlled according to the operation mode (COOL/HEAT). • The set louver position is stored in memory by the microcomputer, and the louver returns to the stored position when the next operation is performed. (Cooling/heating memory position) The angle of the louver is indicated as the horizontal angle is 0°. When the louver closes fully, it directs approx. 28° upward. Louver angle / Horizontal (0˚) **1) Louver position in cooling operation**	

Cooling operation/AUTO (COOL)	Powerful	SLEEP MODE operation
Initial setting of "Cooling storage position" Louver : Directs downward (23˚)	"Cooling storage position" Louver : Directs downward (23˚)	Louver : Directs downward (8˚)

2) Louver position in heating operation

Heating operation/ AUTO (HEAT)	Powerful	SLEEP MODE operation	
		In case that the following temp. is obtained during 12 minutes or 12 to 25 minutes from start of heating operation: Room temp. (Ta) < Set temp. (Tsc) –3.0	In case that the following temp. is obtained during 12 to 25 minutes from start of heating operation: Room temp. (Ta) ≥ Set temp. (Tsc) –3.0 or when 25 minutes or more passed from start of heating operation
Initial setting of "Heating storage position" Louver : Directs downward (81˚)	"Heating storage position" Louver : Directs downward (81˚)	"Heating storage position" Louver : Directs downward (81˚)	"Cooling storage position" Louver : Directs downward (23˚)

3) Louver position in dry operation

Dry operation	Only when the operation frequency is COOL Min–Hz under condition of Room temp. (Ta) < Set temp. (Tsc) +1.0
Initial setting of "Cooling storage position" Louver : Directs downward (23˚)	Louver : Directs downward (8˚)

2) Air direction adjustment

Air direction

Horizontal blowing	Inclined blowing	Blowing downward	Inclined blowing	Horizontal blowing

• The louver position can be arbitrarily set up by pushing [FIX] button.

3) Swing

• Swing operation is performed in width 35° with the stop position as the center.
• If the stop position exceeds either upper or lower limit position, swing operation is performed in width 35° from the limit which the stop position exceeded.

• Swing
When pushing [SWING] button during operation, the louver starts swinging.

Item	Operation flow and applicable data, etc.	Description
10. SLEEP MODE operation	When pushing [SLEEP MODE] button on the remote controller, a quiet and mild operation is performed by reducing the fan speed and the compressor speed. **<Cooling operation>** This function operates the air conditioner with the difference between the set and the room temperature as shown in the following figure. The time correction is performed for 8 minutes each.	

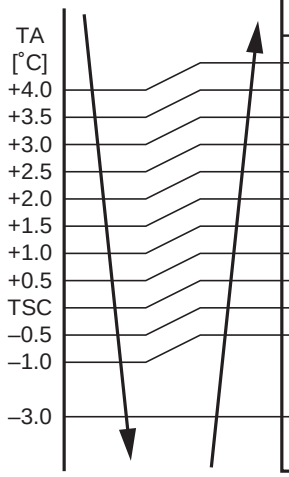

Zone	Compressor speed (rps)			Fan speed (rpm)	Time correction
	10	13	16		
12	31	31	31	L (W6)	+ 1 zone
11	27	27	27	L– (W5)	
10	24	24	24		
9	20	20	20		
8	17	17	17		
7	14	14	14		
6	11	11	11		
5				UL (W4)	± 0
4				SUL (W3)	
3					
2					–1 zone (min 1)
1					
0	OFF	OFF	OFF		

<Cooling operation>

1) The indoor fan speed is controlled between L and SUL.
   The compressor speed in control as shown in the left figure.
2) The set temperature increased 0.5°C per hour up to 2°C starting from the set temperature when SLEEP MODE has been received.

<Heating operation>

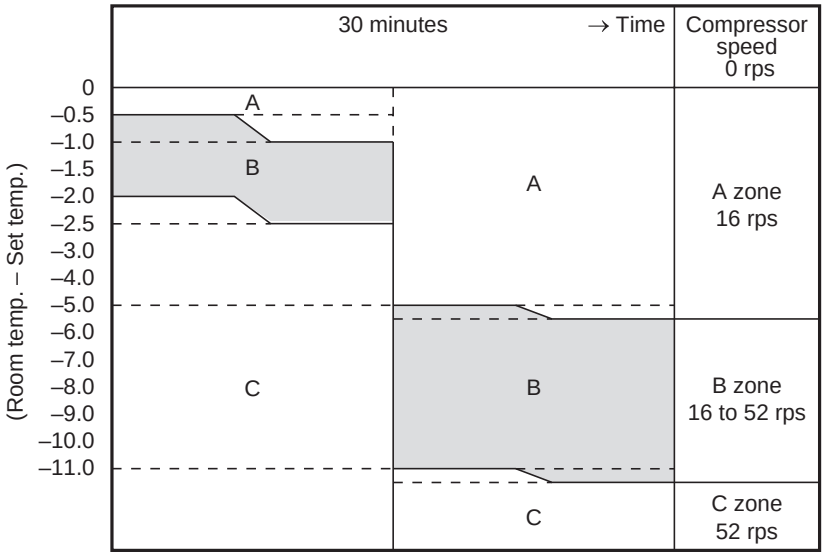

<Heating operation>

1) The indoor fan speed is controlled within (W7) as maximum value.
2) Setting the compressor speed to Max. 52 rps, the temperature zone in which the operation can be performed with Max. 16 rps is gradually widened after 30 minutes passed when starting SLEEP MODE operation.
3) The louver position is set horizontally (Standard cooling position) when the room temperature comes close to the set temperature or when 25 minutes passed after starting SLEEP MODE operation.

Item	Operation flow and applicable data, etc.	Description
11. Temporary operation	Pushing [RESET] button starts the temporary operation of [AUTO] operation. When keeping [RESET] button pushed for 10 seconds or more, the temporary [COOL] operation is performed.	1) When pushing [RESET] button, the temporary [AUTO] operation starts. 2) When keeping [RESET] button pushed for 3 seconds or more, Pi, Pi, Pi sound is heard and [AUTO RESTART] control is changed. 3) When keeping [RESET] button pushed for 10 seconds or more, “Pi” sound is heard and the temporary [COOL] operation starts. 4) If the filter lamp goes on, push [RESET] button to go off the filter lamp, and then push [RESET] button again. 5) To stop the temporary operation, push the button again.

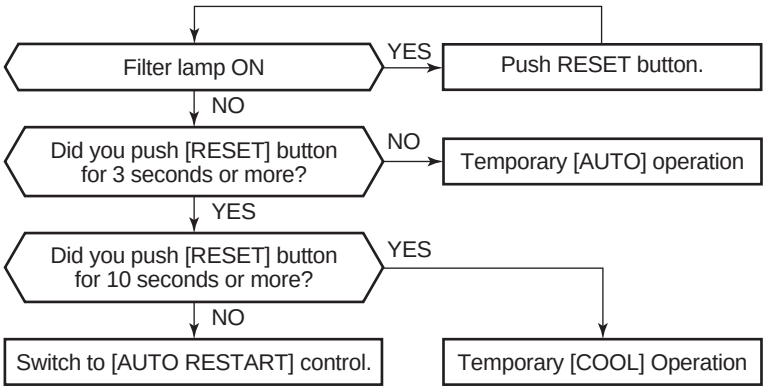

12. Air purifying control

This function generates nagative ion while cleaning the air in the room.

If air purifier-ON signal is received while the air conditioner stops, the air purifier starts operation, and if it is received while the air conditioner operates, the air conditioner and the air purifier start operation. The air ion generator operates linked with the air purifying operation.

Present status	Operation button	
	PURE button	Air conditioner
Stop	Air purifier	AC operation*
Air purifier only	Stop (All)	AC + Air purifier
Air conditioner	AC + Air purifier	All stop
Joint use of AC and air purifier	AC operation	All stop

	Louver*1	Fan speed *2
Air purifying operation	Cooling position	AUTO, L, L+, M, M+, H
AC + Air purifying operation	Follows to AC operation	Follows to AC operation

* When the previous operation was the operation of air conditioner + air purifier, an operation of air conditioner + air purifier starts by pushing AC button on the remote controller.
(Operation of air conditioner + air purifier is stored in memory.)

*1 Swing is available

*2 Fan speed is Fan Auto mode varies in order, (M + 1) → (L) → (L–) → (SL).

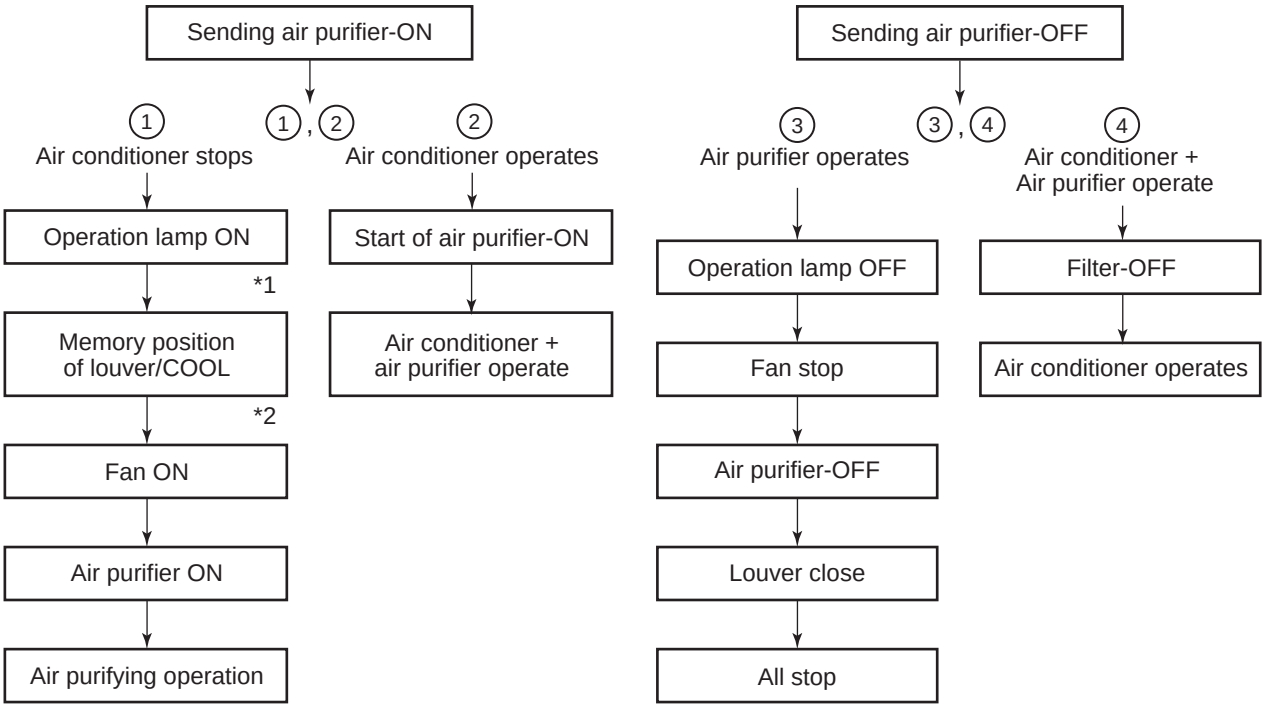

Item	Operation flow and applicable data, etc.	Description

12. Air purifying control [Detection of abnormality]

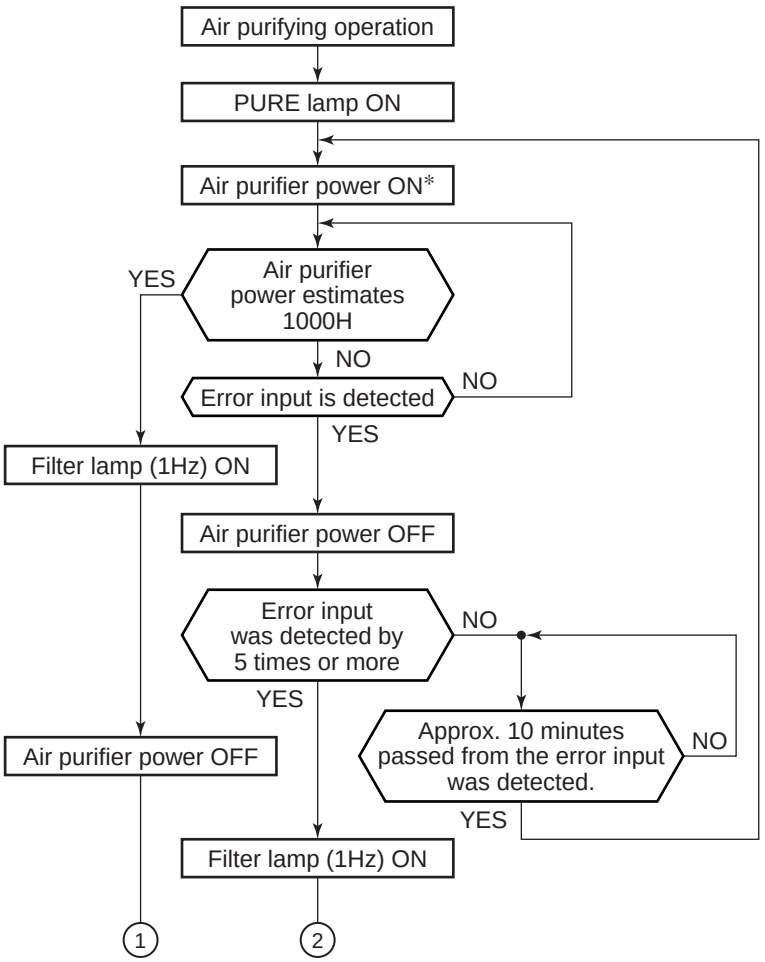

① Reset by RESET button.

② Reset by RESET button or by the stop direction from the remote controller.

* When the breaker is turned [ON] or RESET button is pushed while the FILTER indicator is turned on, the air purifier is not turned on until the integrated operation time of the indoor fan exceeds 1 hour after operation start.
It is the safety measures considering an incomplete drain when electric dust collector has been cleaned with water.

1. Purpose

The air purifying control function is to alert the user to trouble in the ionizing or air purifying operation.

2. Description

Trouble is determined to have occurred (indicated by the FILTER indicator) in the following four cases.

1) When a count of 1000H has been reached on the timer
2) When the panel switch has been set to OFF by the opening of the air inlet grile, etc.
3) When an abnormal discharge caused by a symptom such as the build-up of dirt has been detected while the air purifier is ON
4) When the electric dust collector has not been installed correctly

* Trouble case (2) or (3) is deemed to have occurred when the action concerned continues for more than one second.

3. Operation

The sequence that FILTER indicator is turned on are described in the left flowchart.

1) When 1000H timer counts up, the FILTER indicator keeps lighting even if the operation is stopped by the remote controller.
The timer is stored in memory of the microcomputer, and the operation time is cleared by filter RESET button on the indoor unit.
(FILTER indicator goes off.)
2) If the air purifying error input was detected by 5 times or under, turn on the purifier again approx. 10 minutes after and judge it again.
If the air purifying error input was detected by 5 times or more, determine the error and turn on the Filter lamp.

13. Discharge temperature control

Td value	Control operation
117°C	Judges as an error and stops the compressor.
112°C	Reduce the compressor speed.
108°C	Reduce slowly compressor speed.
105°C	Keeps the compressor speed.
98°C	If the operation is performed with lower speed than one commanded by the serial signal, speed is slowly raised up to the commanded speed.
	Operates with speed commanded by the serial signal.

1. Purpose

This function detects error on the refrigerating cycle or error on the compressor, and performs protective control.

2. Operation

- Control of the compressor speed
The speed control is performed as described in the left table based upon the discharge temperature.

Item	Operation flow and applicable data, etc.	Description
14. Pulse motor valve (PMV) control	This function controls throttle amount of the refrigerant in the refrigerating cycle. According to operating status of the air conditioner, this function controls the open degree of valve with an expansion valve with pulse motor.	1) When starting the operation, move the valve until it fits to the stopper. (Initialize) * In this time, “Click” sound may be heard. 2) Adjust the open degree of valve by super heat amount. (SH control) 3) If the discharge temperature was excessively up, adjust the open degree of valve so that it is in the range of set temperature. (Discharge temp. control) 4) When defrost operation is performed, the open degree of PMV is adjusted according to each setup conditions; during preparation for defrost or during defrost operation (4-way valve is inversed.). 5) When turn off the compressor by thermo. OFF or STOP by remote controller, the open degree of the PMV is adjusted to the setup valve.

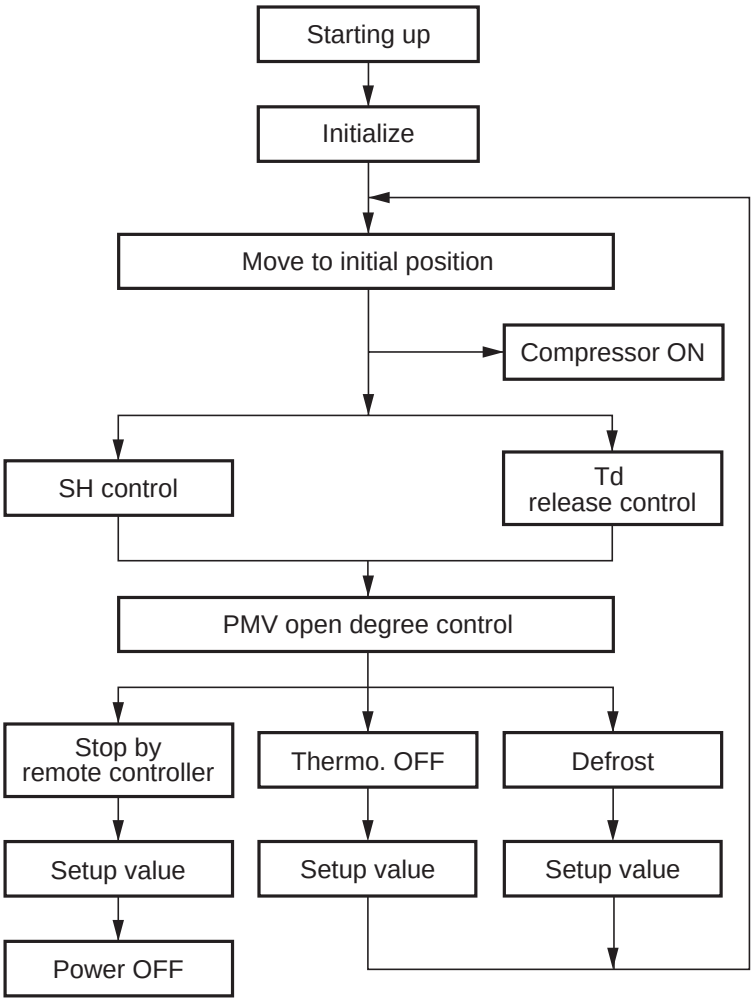

* SH (Super Heat amount) =
  Ts (Temperature of suction pipe of the compressor) –
  Tc or Te (Heat exchanger temperature at evaporation side)
* PMV: Pulse Motor Valve

Item	Operation flow and applicable data, etc.	Description
15. Clean operation		**1. Purpose** The clean operation is to minimize the growth of mold, bacteria etc. by running the fan and drying so as to keep the inside of the air conditioner clean. **Clean operation** When the cooling or dry operation shuts down, the unit automatically starts the clean operation which is then performed for the specified period based on duration of the operation which was performed prior to the shutdown, after which the clean operation stops. (The clean operation is not performed after a heating operation.) **2. Operation** 1) When the stop signal from the remote controller is received, the S.CLEAN indicator (green) on the main body lights, and the clean operation starts. (Neither the OPERATION indicator nor the TIMER indicator light.) 2) The period of the clean operation is determined by the duration of the operation performed prior to the reception of the stop code. 3) After the clean operation has been performed for the specified period, the unit stops operating.

Unit now performing cooling or dry operation

↓

Push “STOP” button

↓

Only S.CLEAN indicator lights, and clean operation starts

↓

Time set now elapses

↓

Operation stops

- During clean operations: The louver opens slightly. The indoor fan operates continuously at a speed of 260 rpm.

  Clean operation times

Operation mode	Operation time	Clean operation time
Cooling: Auto (cooling) Dry	Up to 10 minutes	No clean operation performed (0 minutes)
	10 minutes or longer	4 hours
Heating: Auto (heating)	No clean operation performed	
Auto (fan only)		
Shutdown		

- To stop an ongoing clean operation at any time
  Push the start/stop button on the remote controller twice during the clean operation. (After pushing the button for the first time, push it for the second time without delay (within 10 minutes).)

Item	Operation flow and applicable data, etc.	Description
16. Clean operation cancel	**Setting the clean operation cancel** Add J201 of the indoor P.C. board assembly. * This cancels the auto restart function. ↓ Hold down the [RESET] button on the indoor unit for at least 3 seconds but not more than 10 seconds. ↓ The indoor unit's buzzer emits three beeps. ↓ This completes the clean operation cancel setting. **Setting the clean operation** Hold down the [RESET] button on the indoor unit for at least 3 seconds but not more than 10 seconds. ↓ The indoor unit's buzzer emits three beeps, and the OPERATION indicator flashes at 5 Hz intervals. ↓ This completes the clean operation setting. **Indoor P.C. board** 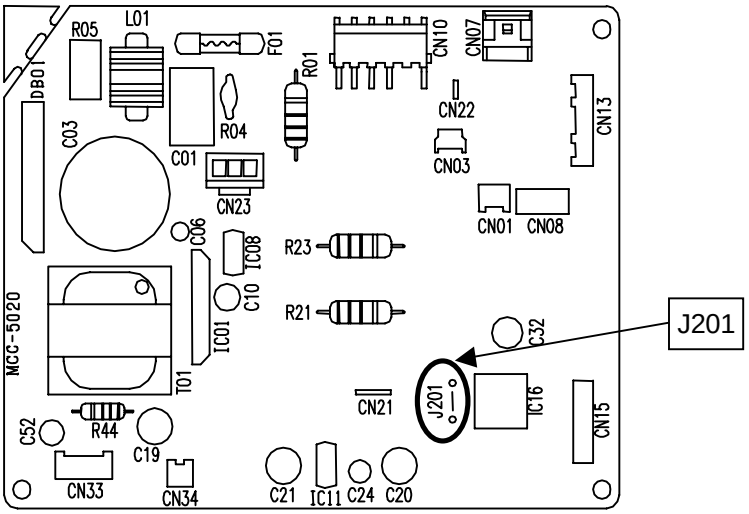 C24	**NOTE:** Once J201 is added, the [RESET] button on the unit is designated for CLEAN OPERATION (Set/Cancel), therefore the [RESET] button can not be used for the selection (Set/Cancel) of AUTO RESTART function (Page 50). * J201 will be near the MCU so take steps to ensure that it will not be exposed to excessive of heat. Also take care to avoid solder bridging with the surrounding components.

Item	Operation flow and applicable data, etc.	Description
17. Select switch on remote controller		**1. Purpose** This operation is to operate only one indoor unit using one remote controller. **2. Description** When operating one indoor unit in a situation where two indoor units have been installed in the same room or nearby rooms, this operation prevents the remote controller signal from being received simultaneously by both units, thus preventing both units from operating. **3. Operation** The indoor unit on which the remote controller selection has been set to B receives the signal of the remote controller also set to B. (At the factory the remote controller selection is set to A on all the indoor units. There is no A setting display.)

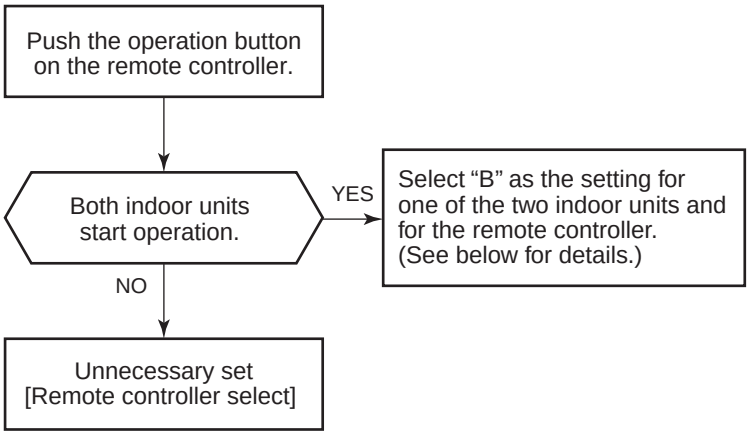

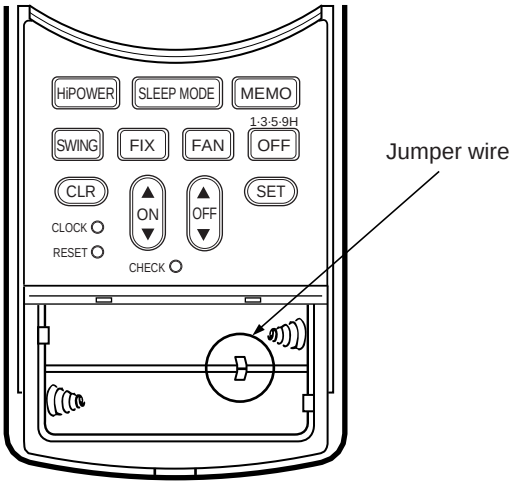

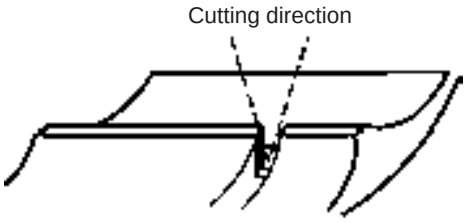

When switching between settings “A” and “B”, always switch the indoor unit board and the remote controller as a pair. (Otherwise, the indoor unit will not accept the remote controller’s signals.)

1. Setting the remote controller

① Slide and open the remote controller cover and remove the batteries.

② Cut the jumper wire inside the battery compartment using nippers.

- The jumper wire should not remain in contact after being cut. Also be careful not to let plastic scraps, jumper wire cuttings or other debris enter the inside of the remote controller.

③ Insert the batteries. “B” appears in the remote controller display.

* Even after the jumper wire has been cut, switching between A and B is still possible by pushing the CHECK button and FIX button together.

The A or B setting, which was switched by pushing the CHECK button and FIX button together, is restored to the setting established prior to the switching when the battery is replaced or the RESET button is pushed.

2. Setting the unit

Push the RESET button (Indoor unit) to start automatic operation.

3. Push the ⏻ button of the remote controller that was set in step 1 to stop the air conditioner. (This operation will change the setting to “B”.)

4. Check that the remote controller operates the indoor unit.

Item	Operation flow and applicable data, etc.	Description
18. Set temp. correction	**<Indoor control P.C. board (At shipment)>**	**1. Purpose** When the difference between the set temp. of the remote controller and the room temp. is wide due to the installation condition, etc, the set temp. is corrected. (HEAT operation only) **2. Description** The set temp. received from the remote controller is corrected. The correct value from –2°C to +4°C is changed by the jumper wire on P.C. board of the indoor microcomputer.

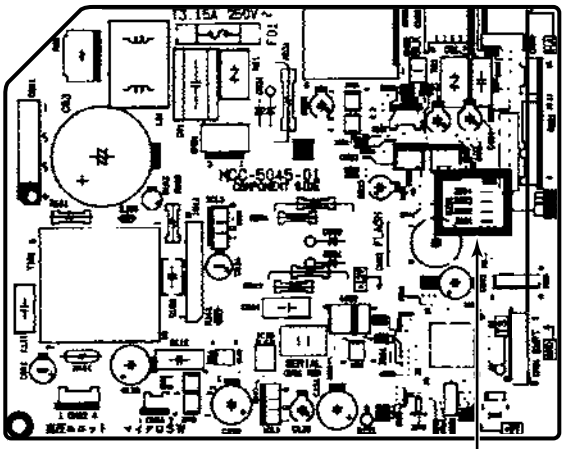

Jumper wire
J801
J802
J803
J804

<In HEAT operation>

Jumper wire setup		HEAT shift value	
J801	J802		
×	×	–2	
×	○	+4	
○	×	+2	
○	○	0	← At shipment

○: With Jumper wire
×: Cut Jumper wire

<In 8°C HEAT operation> (–ND model only)

Jumper wire setup		HEAT shift value	
J803	J804		
×	×	–2	
×	○	+4	
○	×	+2	
○	○	0	← At shipment

○: With Jumper wire
×: Cut Jumper wire

Item	Operation flow and applicable data, etc.	Description
19. Outdoor Quiet control	**<With Quiet control/Non-select method>** Select “Control” or “No control” by keeping [RESET] button pushed for 20 seconds. (“No control” at shipment from the factory) ↓ • Exchanging from “No control” to “Control”: Beep sound is heard (Pi, Pi, Pi, Pi, Pi) and the operation LED 5Hz flashes for 5 seconds. • Exchanging from “Control” to “No control”: Beep sound is heard. (Operation LED does not flash.)	**1. Purpose** For the users who concern about noise of the outdoor unit, this control controls the max. revolutions of the compressor to reduce the noise. **2. Description** To reduce noise, [RESET] button of the indoor unit is kept pushed for 20 seconds. The number of revolution for the indoor fan motor and the setup temp value are kept as they are. **3. Operation** As shown in the table, the maximum revolution number of indoor unit compressor can be reduced. As the maximum number of revolution of the compressor is restricted, the rise-up performance at the start time is weakened.

<Maximum number of revolution of compressor at normal time and Quiet control time>

		RAS-B10SKVP-E		RAS-B13SKVP-E		RAS-B16SKVP-E	
	Outside temp. (TO)	Normal time (rps)	Quiet controlled (rps)	Normal time (rps)	Quiet controlledd (rps)	Normal time (rps)	Quiet controlled (rps)
COOL		59	50	86	74	98	83
HEAT	–5°C ~	76	65	76	65	92	78
	–10 ~ –5°C	76	65	76	65	92	78
	~ –10°C	76	65	76	65	92	78

		RAS-10SKVP-ND		RAS-13SKVP-ND		RAS-16SKVP-ND	
	Outside temp. (TO)	Normal time (rps)	Quiet controlled (rps)	Normal time (rps)	Quiet controlled (rps)	Normal time (rps)	Quiet controlled (rps)
COOL		59	50	86	74	98	83
HEAT	–5°C ~	76	76	76	76	92	92
	–10 ~ –5°C	85	76	90	76	93	92
	~ –10°C	93	76	103	76	105	92

Item	Operation flow and applicable data, etc.	Description
20. 8°C HEAT operation (-ND model only)	Pushing the [8°C] button on the remote controller starts HEAT operation with set temp. 8°C. The air conditioner is controlled according to the room temperature 8°C as a standard. The room temperature may be a little off the room temperature 8°C due to the room size or installation condition of the unit.	**<Start>** **During stop of air conditioner** • Pushing [8°C] button turns on the Operation lamp (Green) of the main unit is turned on and the HEAT operation of set temp. 8°C starts. **During operation of air conditioner** • Pushing [8°C] button shifts the operation to HEAT operation with set temp. 8°C. • In case of COOL (including automatic cooling) or DRY operation, 8°C HEAT operation starts approx. 3 minutes after operation stop. In case of HEAT operation, the operation shifts to 8°C HEAT operation as it is. * If the timer operation has been set up before 8°C HEAT operation, the setup is released when 8°C HEAT operation starts. * When [8°C] button is pushed again during 8°C HEAT operation, the status returns to that before 8°C HEAT operation. * When the operation shifts from 8°C HEAT operation to the normal HEAT operation, the cold draft preventive control works. Therefore the hot air may blow out after approx. 5 minutes. **<Stop>** Pushing ⏻ button stops the operation.

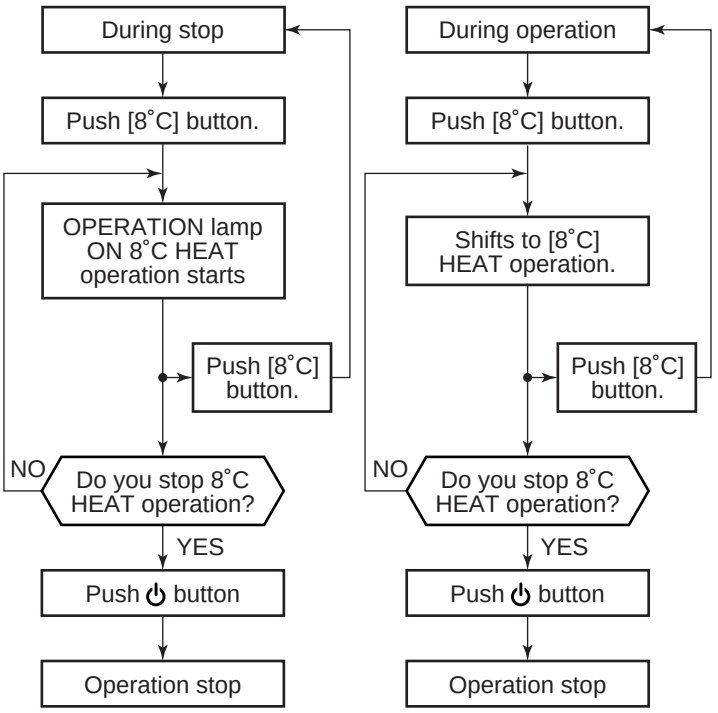

Contents of which setting can be changed during 8°C HEAT operation

① SWING (louver swing)
② FIX (louver position)
③ FAN (fan speed)
④ PURE (pure operation)

Item	Operation flow and applicable data, etc.	Description
20. 8°C HEAT operation (-ND model only)	**<Indoor fan control>** 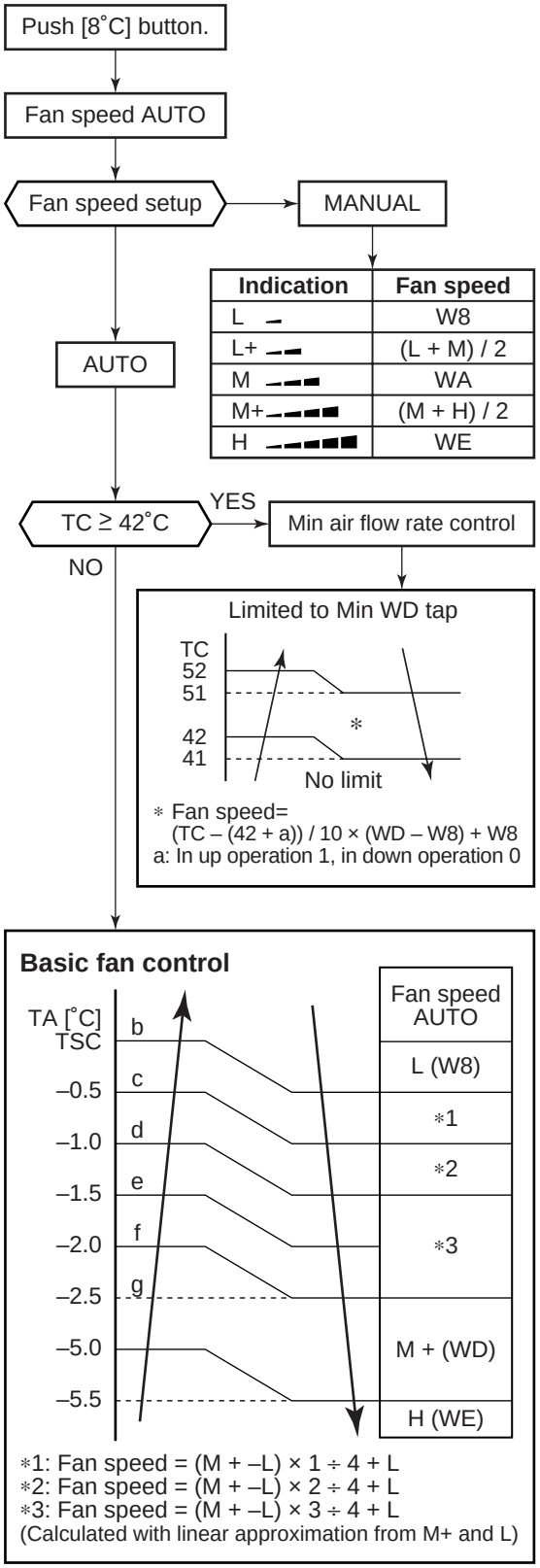 **<Compressor speed control>** Refer to **4. Capacity control**.	**<Indoor fan control>** When 8°C HEAT operation, the indoor fan control rises up automatically. When the indoor fan is operated manually, it is matched with the fan tap. However the cold draft preventive control becomes invalid. **<Compressor speed control>** The compressor speed control is carried out according to **4. Capacity control**.

Indication	Fan speed
L	W8
L+	(L + M) / 2
M	WA
M+	(M + H) / 2
H	WE

Item	Operation flow and applicable data, etc.	Description
21. Cord heater control (-ND model only)	**<Base plate cord heater control>** 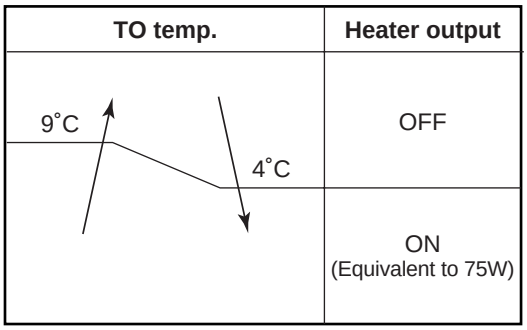 When TO sensor is defective, turn off normal heater output. When COOL thermostat is ON, turn off the heater output.	**1. Purpose** Base plate freeze prevention of the outdoor unit **2. Operation** As shown in the left figure, the base plate freeze preventive heater is controlled by temperature of the outside temp. sensor (TO).

9-3. Auto Restart Function

This indoor unit is equipped with an automatic restarting function which allows the unit to restart operating with the set operating conditions in the event of a power supply being accidentally shut down.
The operation will resume without warning three minutes after power is restored.

This function is not set to work when shipped from the factory. Therefore it is necessary to set it to work.

9-3-1. How to Set the Auto Restart Function

To set the auto restart function, proceed as follows:

The power supply to the unit must be on ; the function will not set if the power is off.

Push the [RESET] button located in the center of the front panel continuously for three seconds.

The unit receives the signal and beeps three times.

The unit then restarts operating automatically in the event of power supply being accidentally shut down.

- **When the unit is standby (Not operating)**

Operation	Motions
Push [RESET] button for more than three seconds. (Less than 10 seconds) 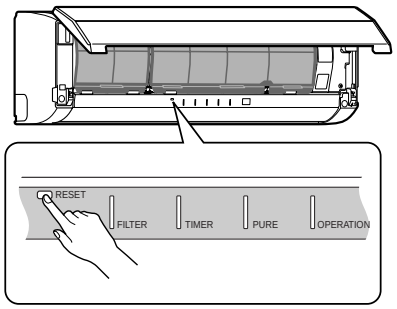	The unit is on standby. ↓ The unit starts to operate. The green indicator is on. ↓ After approx. three seconds, The unit beeps three times and continues to operate. **The green indicator flashes for 5 seconds.** If the unit is not required to operate at this time, push [RESET] button once more or use the remote controller to turn it off.

- **When the unit is in operation**

Operation	Motions
Push [RESET] button for more than three seconds. (Less than 10 seconds) 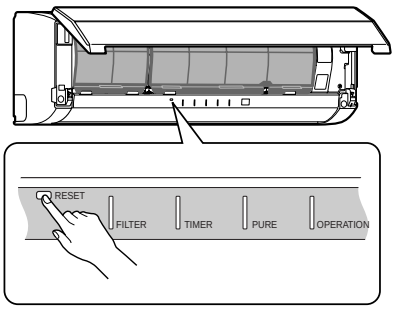	The unit is in operation. The green indicator is on. ↓ The unit stops operating. The green indicator is turned off. ↓ After approx. three seconds, The unit beeps three times. **The green indicator flashes for 5 seconds.** If the unit is required to operate at this time, push [RESET] button once more or use the remote controller to turn it on.

- After restarting the air conditioner by the AUTO RESTART OPERATION, the louver swing (AUTO) operation resumes.
- While the filter check indicator is on, the RESET button has the function of filter reset button.

9-3-2. How to Cancel the Auto Restart Function

To cancel auto restart function, proceed as follows :

Repeat the setting procedure : the unit receives the signal and beeps three times.

The unit will be required to be turned on with the remote controller after the main power supply is turned off.

- **When the system is on stand-by (not operating)**

Operation	Motions
Push [RESET] button for more than three seconds. (Less than 10 seconds) 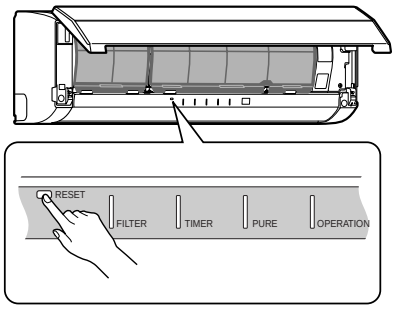	The unit is on standby. ↓ The unit starts to operate. The green indicator is on. ↓ After approx. three seconds, The unit beeps three times and continues to operate. If the unit is not required to operate at this time, push [RESET] button once more or use the remote controller to turn it off.

- **When the system is operating**

Operation	Motions
Push [RESET] button for more than three seconds. (Less than 10 seconds) 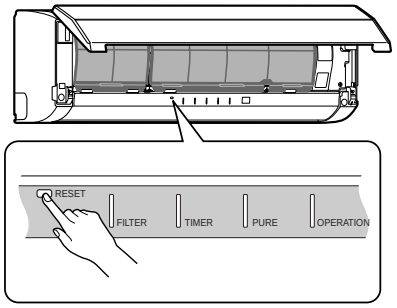	The unit is in operation. The green indicator is on. ↓ The unit stops operating. The green indicator is turned off. ↓ After approx. three seconds, The unit beeps three times. If the unit is required to operate at this time, push [RESET] button once more or use the remote controller to turn it on.

9-3-3. Power Failure During Timer Operation

When the unit is turned off because of power failure during timer operation, the timer operation is cancelled. In that case, set the timer operation again.

NOTE :

The Everyday Timer is reset while a command signal can be received from the remote controller even if it stopped due to a power failure.

9-4. FILTER Indicator

When the elapsed time reaches 1000 hours after air purifier operation, the FILTER indicator lights.

After cleaning the filters, turn off the FILTER indicator.

9-4-1. How to Turn Off FILTER Indicator

Push [RESET] button on the indoor unit.

NOTE :

If [RESET] button is pushed while the FILTER indicator is not lit, the indoor unit will start the automatic operation.

When you want a temporary operation while the FILTER lamp lights, push [RESET] button to turn off the FILTER lamp.

9-5. Remote Controller and Its Fuctions

9-5-1. Parts Name of Remote Controller

1 Infrared signal transmitter

Transmits signals to the indoor unit.

2 ⏻ button

Push the button to start operation.
(A receiving beep is heard.)

Push the button again to stop operation.
(A receiving beep is heard.)

If no receiving sound is heard from the indoor unit, push the button again.

3 Mode select button (MODE)

Push this button to select a mode. Each time you push the button, the modes cycle in order from A: Auto changeover control, ☼ : COOL, 💧 : DRY, ☀ : HEAT and back to A. (A receiving beep is heard.)

4 Temperature button (TEMP ▲▼)

▲... The temperature setting is raised to 30°C.

▼... The temperature setting is lowered to 17°C.
(A receiving beep is heard.)

5 Fan speed button (FAN)

Push this button to select the fan speed.

When you select AUTO, the fan speed is automatically adjusted according to the room temperature. You can also manually select the desired fan speed from five available settings. (LOW ▁ , LOW+ ▁▂ , MED ▁▂▃ , MED+ ▁▂▃▄ , HIGH ▁▂▃▄▅)
(A receiving beep is heard.)

6 Auto louver button (SWING)

Push this button to swing the louver.
(A receiving beep is heard.)

Push the button again to stop the louver from swinging. (A receiving beep is heard.)

7 Set louver button (FIX)

Push this button to adjust the air flow direction.
(A receiving beep is heard.)

8 ON timer button (ON)

Use this button to change the clock and ON timer times.

To move up the time, push ▲ of the ON button.

To move down the time, push ▼ of the ON button.

9 OFF timer button (OFF)

Use this button to change the OFF timer times.

To move up the time, push ▲ of the OFF button.

To move down the time, push ▼ of the OFF button.

10 Reserve button (SET)

Push this button to store the time settings.
(A receiving beep is heard.)

11 Cancel button (CLR)

Push this button to cancel the ON timer and OFF timer. (A receiving beep is heard.)

12 High power button (Hi POWER)

Push this button to start high power operation.

13 Memory button (MEMO)

Push this button to ready for storing the settings.

Hold down the button for 3 seconds or more to store the setting indicated on the remote controller and until the Ⓟ mark is displayed.

14 Automatic operation button (AUTO)

Push this button to operate the air conditioner automatically. (A receiving beep is heard.)

15 SLEEP MODE button

Push this button to start sleep mode.

16 MY COMFORT button

Push this button to operate the air conditioner according to the settings stored using the MEMO button.

17 PURE button (PURE)

Push this button to start the electrical air purifying operation.

Push the button again to stop operation.

18 Off timer button (OFF)

Push this button to start the OFF timer operation.

You can select the OFF timer time from among four settings (1, 3, 5 or 9 hours).

19 8°C operation button (8°C)
(-ND model only)

Push this button to start the 8°C set temperature heating operation.

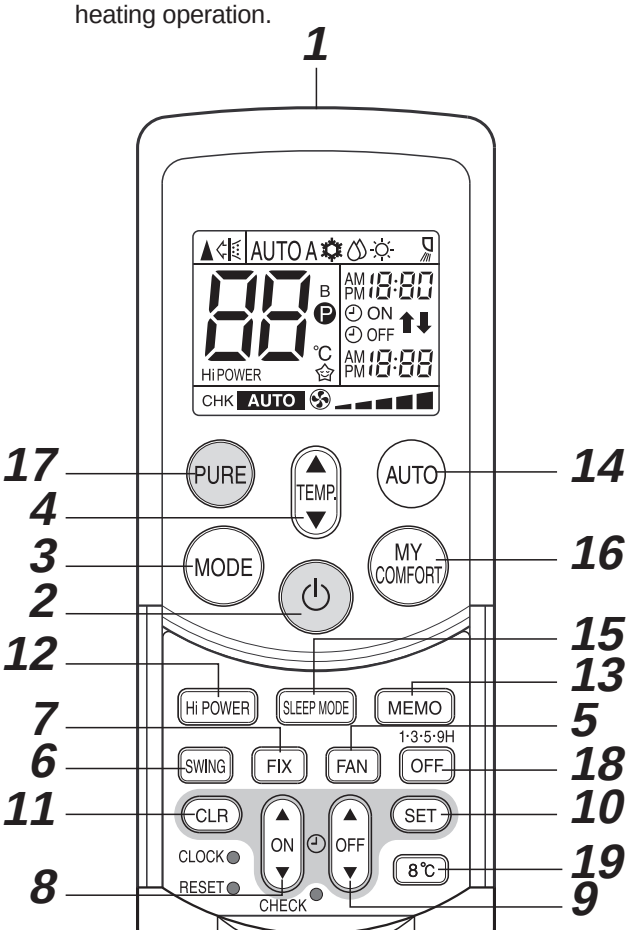

9-5-2. Name and Functions of Indications on Remote Controller

[Display]

All indications, except for the clock time indicator, are displayed by pushing the ⏻ button.

1 Transmission mark

This transmission mark ▲ indicates when the remote controller transmits signals to the indoor unit.

2 Mode indicator

Indicates the current operation mode.
(AUTO : Automatic control, A : Auto changeover control, ☼ : Cool, 💧 : Dry, ☀ : Heat)

3 Temperature indicator

Indicates the temperature setting.
(17°C to 30°C)

4 PURE indicator

Shows that the electrical air purifying operation is in progress.

5 FAN speed indicator

Indicates the selected fan speed.

AUTO or five fan speed levels
(LOW ▁ , LOW+ ▁▁ , MED ▁▁▁ , MED+ ▁▁▁▁ , HIGH ▁▁▁▁▁) can be shown.

Indicates AUTO when the operating mode is either AUTO or 💧 : Dry.

6 TIMER and clock time indicator

The time setting for timer operation or the clock time is indicated.

The current time is always indicated except during TIMER operation.

7 Hi POWER indicator

Indicates when the Hi POWER operation starts.

Push the Hi POWER button to start and push it again to stop the operation.

8 Ⓟ (MEMORY) indicator

Flashes for 3 seconds when the MEMO button is pushed during operation.

The Ⓟ mark is shown when holding down the button for 3 seconds or more while the mark is flashing.

Push another button to turn off the mark.

9 SLEEP MODE indicator

Indicates when the SLEEP MODE is in activated.

Push the SLEEP MODE button to start and push it again to stop operation.

10 A, B change indicator remote controller

When the remote controller switching function is set, “B” appears in the remote controller display. (When the remote controller setting is “A”, there is no indication at this position.)

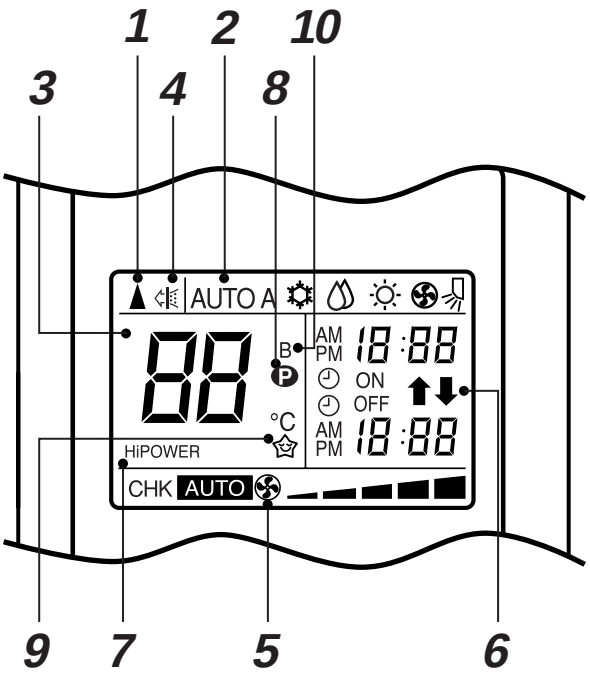

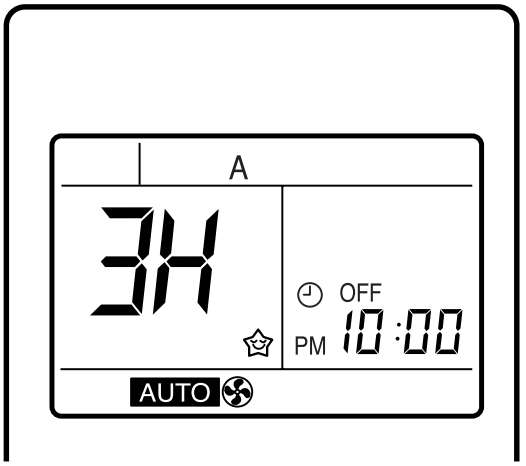

- In the illustration, all indications are shown for purposes of explanation.

  During operation, only the relevant indicators are shown on the remote controller.

9-6. Hi POWER Mode ([Hi POWER] button on the remote controller is pushed)

When [Hi POWER] button is pushed while the indoor unit is in Auto, Cooling or Heating operation, Hi POWER mark is indicated on the display of the remote controller and the unit operates as follows.

1. Automatic operation

- The preset temperature changes according to the operation mode selected.
  In the Cooling operation, the preset temperature drops 1°C.
  In the Heating operation, the preset temperature increases 2°C.

2. Cooling operation (Manual)

- The preset temperature drops 1°C.
  (The value of the preset temperature on the remote controller does not change.)

3. Heating operation (Manual)

- The preset temperature increases 2°C.
  (The value of the preset temperature on the remote controller does not change.)

4. The Hi POWER mode can not be set in Dry operation

5. Release of Hi POWER mode

- Push [Hi POWER] button on the remote controller again.

10. INSTALLATION PROCEDURE

10-1. Safety Cautions

Hook
47 mm or more
① Installation plate
Hook
140 mm or more
74 mm or more
Hook
⑥ Mounting screw
⑤ Plasma pure filter
Air filters
Ⓩ Shield pipe (for extension drain hose)
② Wireless remote controller
80 mm or more only when unobstructed to the front and both sides
Ⓨ
100 mm or more from wall
In principle, leave open
50 mm or more from wall
(C)
(D)
④ Remote controller holder
200 mm or more
(B)
(A)
⑦ Remote controller holder mounting screw
250 mm or more from wall
Power cord
Extension drain hose (Option: RB-821SW)
When installing the outdoor unit, leave open in at least two of directions (A), (B), (C) and (D) shown in the figure below.
Ensure sufficient space to allow drainage

For the rear left and left piping

Wall

Insert the cushion between the indoor unit and wall, and tilt the indoor unit for better installation work.

Do not allow the drain hose to become slack.

Cut the piping hole slightly sloped

Make sure the drain hose is sloped downward.

The auxiliary piping can be connected at the left, rear left, rear right, right, bottom right or bottom left as shown below.

Right
Rear right
Bottom left
Left
Bottom right
Rear left

As shown in the figure, position power cord and connecting cable downward, and lead out along piping connection port.

Insulate the refrigerant pipes separately, not together.

6 mm thick heat resisting polyethylene foam

Before installing the wireless remote controller

- With the remote controller cover removed, correctly load the supplied batteries while observing their polarity.

Cover
③ Batteries
② Wireless remote controller

- **Indoor units connectable with a multi-system outdoor unit (Other indoor units are unavailable.) RAS-B10SKVP-E, RAS-B13SKVP-E, RAS-B16SKVP-E**
- **When using a multi-system outdoor unit, refer to the installation manual provided with the model concerned.**

10-2. Optional Parts, Accessories and Tools

10-2-1. Optional Installation Parts

Part Code	Parts name			Q'ty
Ⓨ	Refrigerant piping			. 1 ea.
	Indoor unit name	Liquid side (Outer diameter)	Gas side (Outer diameter)	
	RAS-B10SKVP-E, B13SKVP-E RAS-10SKVP-ND, 13SKVP-ND	6.35 mm	9.52 mm	
	RAS-B16SKVP-E, 16SKVP-ND	6.35 mm	12.7 mm	
Ⓩ	Shield pipe (for extension drain hose) (polyethylene foam, 6 mm thick)			1

Attachment bolt arrangement of outdoor unit

- Secure the outdoor unit with the attachment bolts and nuts if the unit is likely to be exposed to a strong wind.
- Use Ø8 mm or Ø10 mm anchor bolts and nuts.

  If it is necessary to drain the defrost water, attach drain nipple to the base plate of the outdoor unit before installing it.

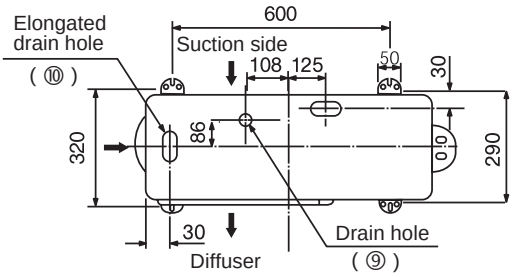

10-2-2. Accessory and Installation Parts

Part No.	Part name (Q'ty)	Part No.	Part name (Q'ty)	Part No.	Part name (Q'ty)
①	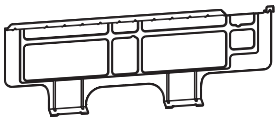 Installation plate × 1	④	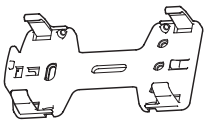 Remote controller holder × 1	⑦	Remote controller holder mounting screw Ø3.1 × 16L × 2
②	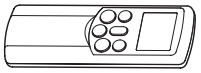 Wireless remote controller × 1	⑤	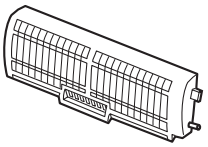 Plasma pure filter × 1	⑧	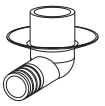 Drain nipple* × 1
③	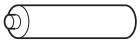 Battery × 2	⑥	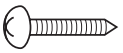 Mounting screw Ø4 × 25L × 6	⑨	Water-proof rubber cap* × 2

<Others>

Name
Owner's manual
Installation manual
Important information and warning*
B/W strips* (Energy efficiency labels)

This model is not equipped with an extension drain hose.

Parts marked with asterisk (*) are packaged with the outdoor unit.

Option:

For the extension drain hose, use the optionally available RB-821SW or a commercially available one.

- **Indoor units connectable with a multi-system outdoor unit (Other indoor units are unavailable.)**
  RAS-B10SKVP-E, RAS-B13SKVP-E, RAS-B16SKVP-E
- **When using a multi-system outdoor unit, refer to the installation manual provided with the model concerned.**

10-2-3. Installation/Servicing Tools

Changes in the product and components

In the case of an air conditioner using R410A, in order to prevent any other refrigerant from being charged accidentally, the service port diameter of the outdoor unit control valve (3 way valve) has been changed.
(1/2 UNF 20 threads per inch)

- In order to increase the pressure resisting strength of the refrigerant piping flare processing diameter and size of opposite side of flare nuts has been changed. (for copper pipes with nominal dimensions 1/2 and 5/8)

New tools for R410A

New tools for R410A	Applicable to R22 model		Changes
Gauge manifold	×		As pressure is high, it is impossible to measure by means of conventional gauge. In order to prevent any other refrigerant from being charged, each port diameter has been changed.
Charge hose	×		In order to increase pressure resisting strength, hose materials and port size have been changed (to 1/2 UNF 20 threads per inch). When purchasing a charge hose, be sure to confirm the port size.
Electronic balance for refrigerant charging	○		As pressure is high and gasification speed is fast, it is difficult to read the indicated value by means of charging cylinder, as air bubbles occur.
Torque wrench (nominal diam. 1/2, 5/8)	×		The size of opposite sides of flare nuts have been increased. Incidentally, a common wrench is used for nominal diameters 1/4 and 3/8.
Flare tool (clutch type)	○		By increasing the clamp bar's receiving hole, strength of spring in the tool has been improved.
Gauge for projection adjustment	—	—	Used when flare is made by using conventional flare tool.
Vacuum pump adapter	○	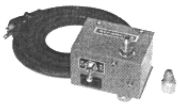	Connected to conventional vacuum pump. It is necessary to use an adapter to prevent vacuum pump oil from flowing back to the charge hose. The charge hose connecting part has two ports-one for conventional refrigerant (7/16 UNF 20 threads per inch) and one for R410A. If the vacuum pump oil (mineral) mixes with R410A a sludge may occur and damage the equipment.
Gas leakage detector	×		Exclusive for HFC refrigerant.

- Incidentally, the "refrigerant cylinder" comes with the refrigerant designation (R410A) and protector coating in the U. S's ARI specified rose color (ARI color code: PMS 507).
- Also, the "charge port and packing for refrigerant cylinder" require 1/2 UNF 20 threads per inch corresponding to the charge hose's port size.

10-3. Indoor Unit

10-3-1. Installation Location

- A place which provides enough spaces around the indoor unit as shown in the diagram.
- A place where there are no obstacles near the air inlet and outlet.
- A place which allows easy installation of the piping to the outdoor unit.
- A place which allows the front panel to be opened.

CAUTION

- The indoor unit shall be installed so that the top of the indoor unit is positioned at least 2m in height.

  Also, avoid putting anything on the top of the indoor unit.
- Direct sunlight on the indoor unit wireless receiver should be avoided.
- The microprocessor in the indoor unit should not be too close to r-f sources.
  (For details, see the owner's manual.)

Remote controller

- Should be placed where there are no obstacles, such as curtains, that may block the signal.
- Do not install the remote controller in a place exposed to direct sunlight or close to a heating source, such as a stove.
- Keep the remote controller at least 1 m away from the nearest TV set or stereo equipment.
  (This is necessary to prevent image disturbances or noise interference.)
- The location of the remote controller should be determined as shown below.

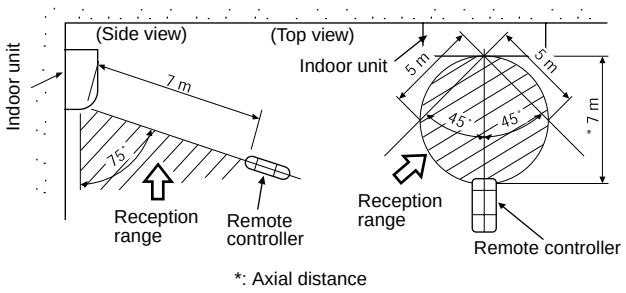

Fig. 10-3-1

10-3-2. Drilling and Mounting Installation Plate

Drilling

When install the refrigerant pipes from the rear.

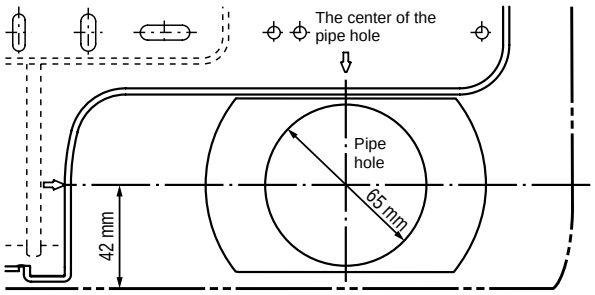

Fig. 10-3-2

1. Decide the installation plate mounting position on the wall.
2. Mark the corresponding pipe hole wall positions according to the positioning marks (⇨) on the installation plate.
3. Drill the pipe holes (Ø65 mm) slightly slanted downward to the outside.

NOTE :

- When drilling into a wall that contains a metal lath, wire lath or metal plate, be sure to use a pipe hole brim ring sold separately.

Mounting the installation plate

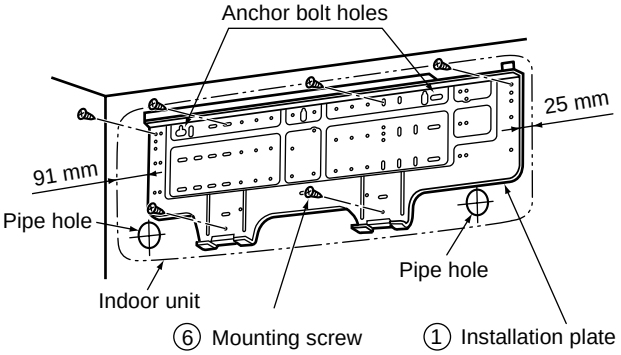

Fig. 10-3-3

When the installation plate is directly mounted on the wall

1. Securely fit the installation plate onto the wall by screws with the upper and lower catches.
2. To mount the installation plate on a concrete wall use anchor bolts. Drill the anchor bolt holes as illustrated in the above figure.
3. Place the level at the top end of the installation plate, and check that the plate is horizontal.

CAUTION

When installing the installation plate with mounting screws, do not use the anchor bolt holes.

Otherwise the unit may fall down and result in personal injury and property damage.

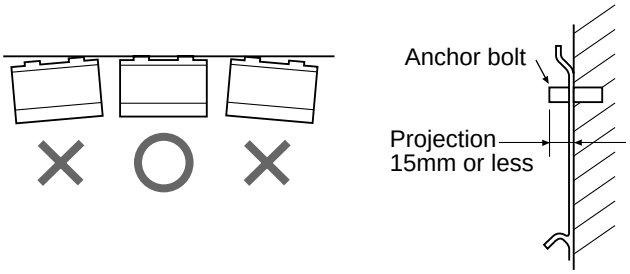

Fig. 10-3-4

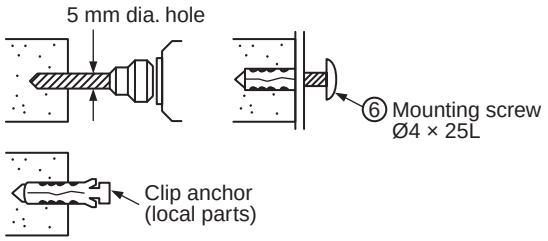

Fig. 10-3-5

CAUTION

Failure to securely install the unit may result in personal injury and/or property damage if the unit falls.

- In case of block, brick, concrete or similar type walls, drill 5 mm dia. holes in the wall.
- Insert clip anchors for the ⑥ mounting screws.

NOTE :

- Install the installation plate using between 4 to 6 mounting screws, making sure all four corners are secure.

10-3-3. Electrical Work

1. The supply voltage must be the same as the rated voltage of the air conditioner.
2. Prepare a power source for the exclusive use of the air conditioner.

NOTE :

- Wire type :
  More than H07RN-F or 60245IEC66 (1.0mm²)

CAUTION

A switch or circuit breaker that can disconnect all poles must be included in the fixed wiring.

Be sure to use an approved circuit breaker or switch.

NOTE :

- Make sure the wire length is sufficient before performing wiring work.

10-3-4. Wiring Connection

How to connect the connecting cable

Wiring the connecting cable can be carried out without removing the front panel.

1. Remove the air inlet grille. Open the air inlet grille upward and pull it toward you.
2. Remove the terminal cover and cord clamp.
3. Insert the connecting cable (or as according to local regulations/codes) into the pipe hole on the wall.
4. Pull the connecting cable through the cable slot on the rear panel so that it protrudes about 15 cm out of the front.
5. Insert the connecting cable fully into the terminal block and secure it tightly with screws.

   Make a loop with the earth wire under the terminal block and secure it with the earth screw.
6. Tightening torque: 1.2 N•m (0.12 kgf•m)
7. Secure the connecting cable with the cord clamp.
8. Attach the terminal cover, rear plate bushing and air inlet grille on the indoor unit.

CAUTION

- Be sure to refer to the wiring system diagram labeled inside the front panel.
- Check local electrical regulations for any specific wiring instructions or limitations.

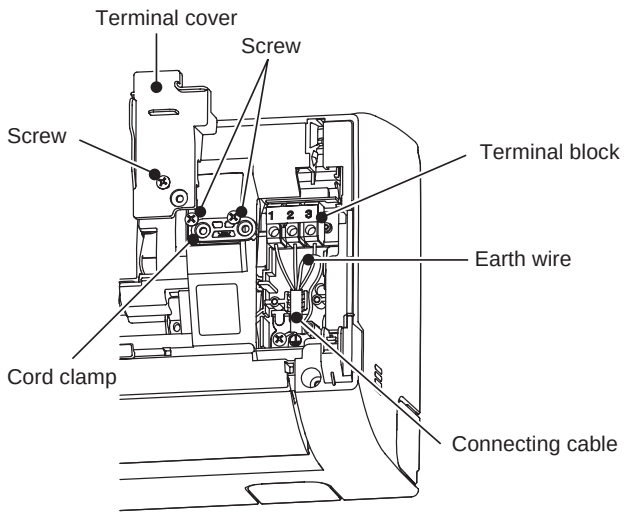

Fig. 10-3-6

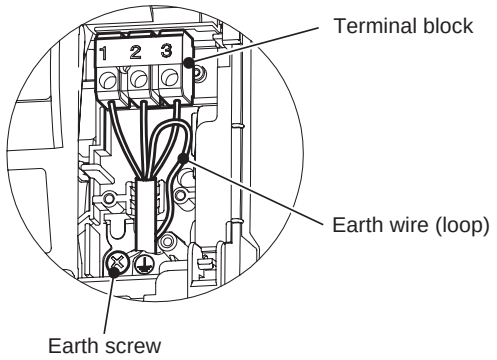

Fig. 10-3-7

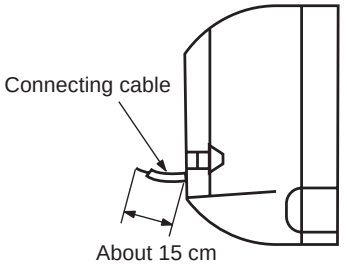

Fig. 10-3-8

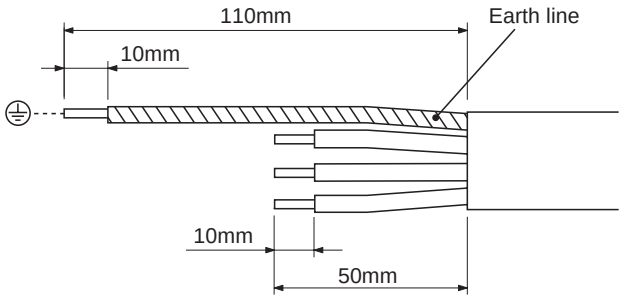

Fig. 10-3-9

NOTE :

- Connecting cable (Indoor unit/outdoor unit)
- Wire type: H07RN-F or 60245IEC66 (1.0 mm²)

10-3-5. Piping and Drain Hose Installation

Piping and drain hose forming

- Since condensation results in machine trouble, make sure to insulate both the connecting pipes separately.
  (Use polyethylene foam as insulating material.)

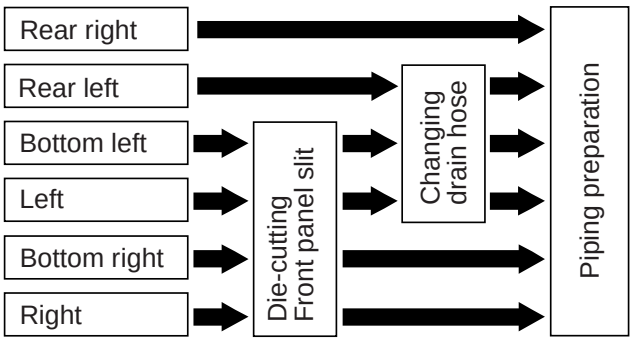

Fig. 10-3-10

1. Die-cutting front panel slit

Cut out the slit on the left or right side of the front panel for the left or right connection and the slit on the bottom left or right side of the front panel for the bottom left or right connection with a pair of nippers.

2. Changing drain hose

For left connection, left-bottom connection and rear-left connection's piping, it is necessary to relocate the drain hose and drain cap.

How to remove the drain cap

Clip drain cap with needle-nose pliers, and pull out.

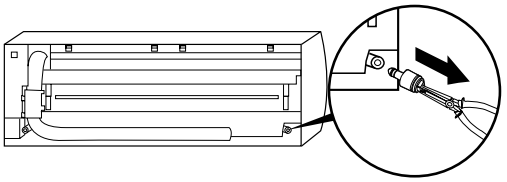

Fig. 10-3-11

How to remove the drain hose

The drain hose is secured in place by a screw.

Remove the screw securing the drain hose, then pull out the drain hose.

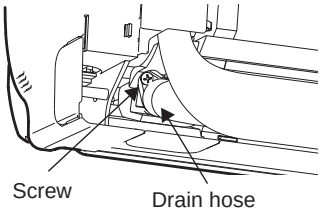

Fig. 10-3-12

How to attach the drain cap

1. Insert hexagonal wrench (4 mm).

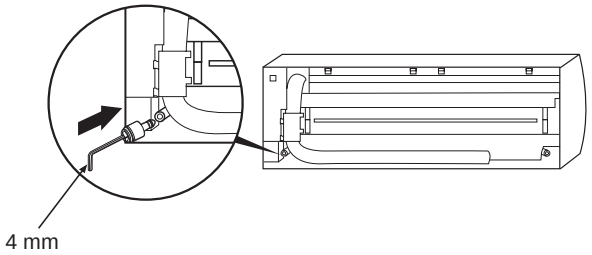

Fig. 10-3-13

2. Firmly insert drain cap.

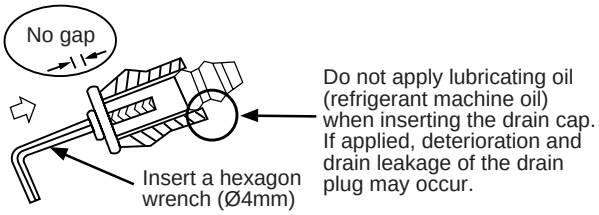

Fig. 10-3-14

How to attach the drain hose

Always use the original screw that secured the drain hose to the unit.

Using a different screw may cause water to leak.

Insert the drain hose firmly until the connector contacts with the insulation, then secure it in place using the original screw.

CAUTION

Securely insert the drain hose and drain cap; otherwise, water may leak.

In case of right or left piping

- After making slits on the front panel with a knife or similar tool, cut them out with a pair of nippers or an equivalent tool.

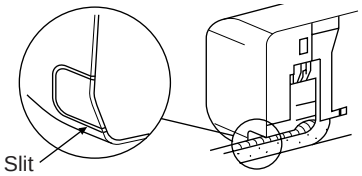

Fig. 10-3-15

In case of bottom right or bottom left piping

- After making slits on the front panel with a knife or similar tool, cut them out with a pair of nippers or an equivalent tool.

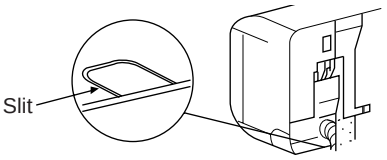

Fig. 10-3-16

Left-hand connection with piping

Bend the connecting pipes so that they are positioned within 43 mm above the wall surface.

If the connecting pipes are positioned more than 43 mm above the wall surface, the indoor unit may be unstable.

When bending the connecting pipe, make sure to use a spring bender to avoid crushing the pipe.

Refer to the table below for the bending radius of each connection pipe.

Outer diameter	Bending radius
6.35 mm	30 mm
9.52 mm	40 mm
12.7 mm	50 mm

To connect the pipe after installation of the unit (figure)

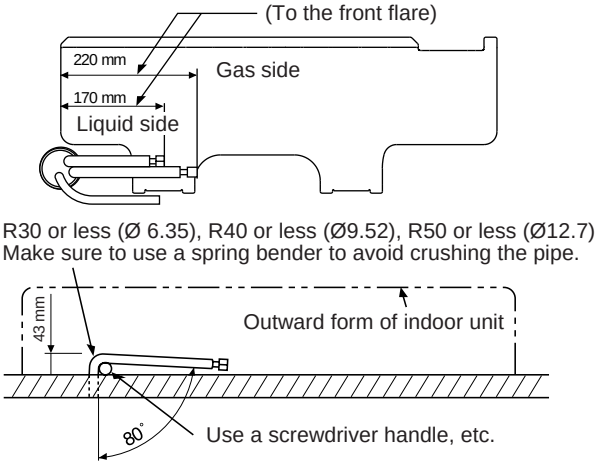

Fig. 10-3-17

NOTE :

If the pipe is incorrectly bent, the indoor unit may be unstable on the wall.

After passing the connecting pipe through the pipe hole, connect the connecting pipe to the auxiliary pipes and wrap the facing tape around them.

CAUTION

- Bind the auxiliary pipes (two) and connecting cable with facing tape tightly.

  In case of leftward piping and rear-leftward piping, bind the auxiliary pipes (two) only with facing tape.

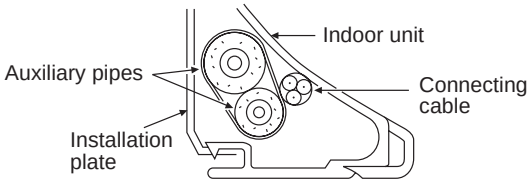

Fig. 10-3-18

- Carefully arrange the pipes so that none of the pipes stick out of the rear plate of the indoor unit.
- Carefully connect the auxiliary pipes and connecting pipes to each other and cut off the insulating tape wound on the connecting pipe to avoid double-taping at the joint, moreover, seal the joint with the vinyl tape, etc.
- Since condensation can result in machine performance trouble, be sure to insulate both connecting pipes. (Use polyethylene foam as insulating material.)
- When bending a pipe, be careful not to crush it.

10-3-6. Indoor Unit Installation

1. Pass the pipe through the hole in the wall, and hook the indoor unit on the installation plate at the upper hooks.
2. Swing the indoor unit to right and left to confirm that it is firmly hooked on the installation plate.
3. While pushing the indoor unit onto the wall, hook it at the lower part on the installation plate.
   Pull the indoor unit toward you to confirm that it is firmly hooked on the installation plate.

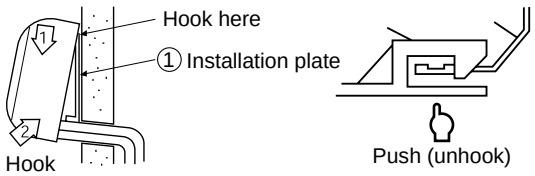

Fig. 10-3-19

- For detaching the indoor unit from the installation plate pull the indoor unit toward you while pushing the bottom up at the specified places.

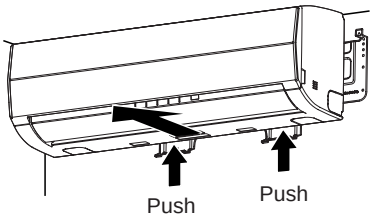

Fig. 10-3-20

10-3-7. Drainage

1. Run the drain hose at a downward sloped angle.

NOTE :

- Hole should be made at a slight downward slant on the outdoor side.

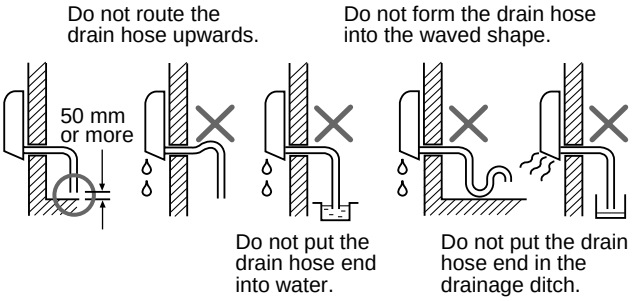

Fig. 10-3-21

2. Put water in the drain pan and make sure that the water is being drained outside.
3. When connecting extension drain hose, insulate the connection part of extension drain hose with shield pipe.

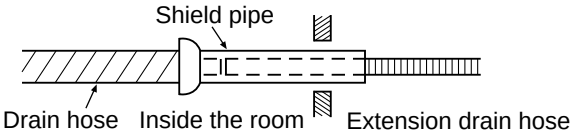

Fig. 10-3-22

CAUTION

Install the drain pipe for proper drainage.

Improper drainage can result in water dripping inside the room.

This air conditioner has been designed to drain water collected from condensation which forms on the back of the indoor unit, to the drain pan.

Therefore, do not locate the power cord and other parts at a height above the drain guide.

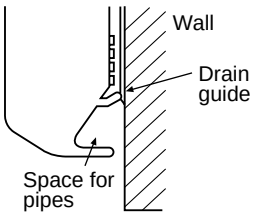

Fig. 10-3-23

10-4. Outdoor Unit

10-4-1. Installation Location

- A place which provides enough space around the outdoor unit as shown in the diagram.
- A place which can bear the weight of the outdoor unit and does not allow an increase in noise level and vibration.
- A place where the operation noise and discharged air do not disturb neighbors.
- A place which is not exposed to a strong wind.
- A place free of combustible gases.
- A place which does not block a passageway.
- When the outdoor unit is to be installed in an elevated position, be sure to secure its feet.
- This air conditioner accepts a connection piping length from 2 m to 25 m.
  - There is no need to add refrigerant as long as the length of the connection piping is 15 m or less.
  - You will need to add 20 g of refrigerant per meter of added connection piping for installations requiring connection piping to be between 16 m to 25 m.
- An allowable height level is up to 10 m.
- A place where the drain water does not cause any problems.

Precautions for adding refrigerant

- Use a scale having at least 10 g per index line precision when adding the refrigerant.

  Do not use a bathroom scale or similar instrument.
- Use liquid refrigerant when refilling the refrigerant. Since the refrigerant is in liquid form, it can fill quickly.

  Therefore, perform the filling operation carefully and insert the refrigerant gradually.

CAUTION

1. Install the outdoor unit in a location where there are no obstructions near its air intake or air outlet.
2. When the outdoor unit is installed in a place that is always exposed to strong winds like on the coast or on a high story of a building, secure the normal fan operation using a duct or a wind shield.
3. Especially in windy areas, install the unit to prevent the admission of wind.
4. Installation in the following places may result in trouble.

   Do not install the unit in such places.
   - A place full of machine oil.
   - A saline-place such as the coast.
   - A place full of sulfide gas.
   - A place where high-frequency waves are likely to be generated, such as from audio equipment, welders, and medical equipment.

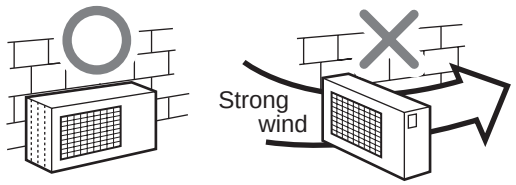

Fig. 10-4-1

10-4-2. Draining the Water

- Holes are provided on the base plate of the outdoor unit to ensure that the defrost water produced during heating operations is drained off efficiently.

  If a centralized drain is required when installing the unit on a balcony or wall, follow the steps below to drain off the water.

1. Proceed with water-proofing by installing the water-proof rubber caps ⑨ in the 2 elongated holes on the base plate of the outdoor unit.
   [How to install the water-proof rubber caps]
   1) Place four fingers into each cap, and insert the caps into the water drain holes by pushing them into place from the underside of the base plate.
   2) Push down on the outer circumferences of the caps to ensure that they have been inserted tightly.
      (Water leaks may result if the caps have not been inserted properly, if their outer circumferences lift up or the caps catch on or wedge against something.)

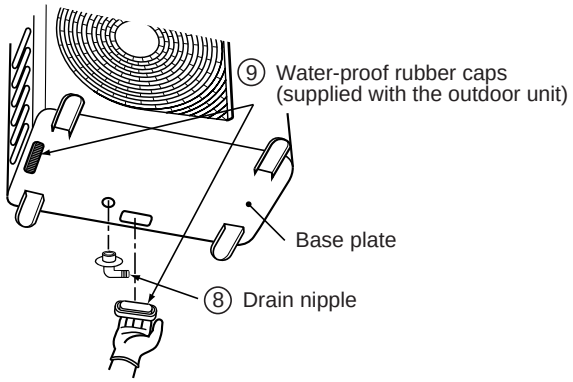

Fig. 10-4-2

2. Install the drain nipple ⑧ and a commercially available drain hose (with 16 mm inside diameter), and drain off the water.
   (For the position where the drain nipple ⑧ is installed, refer to the installation diagram of the indoor and outdoor units.)
   - Check that the outdoor unit is horizontal, and route the drain hose at a downward sloped angle with very little slack to the hose.

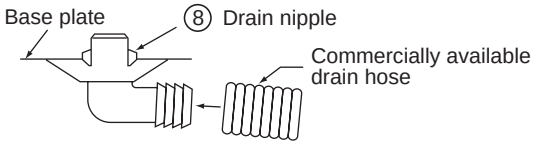

Do not use ordinary garden hose, which can flatten and prevent drainage.

Fig. 10-4-3

10-4-3. Refrigerant Piping Connection

Flaring

1. Cut the pipe with a pipe cutter.

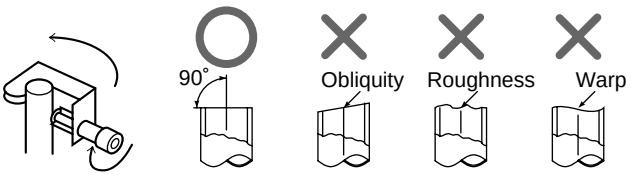

Fig. 10-4-4

2. Insert a flare nut into the pipe, and flare the pipe.

- **Projection margin in flaring : A (Unit : mm)**

Rigid (Clutch type)

Outer dia. of copper pipe	R410A tool used	Conventional tool used
6.35	0 to 0.5	1.0 to 1.5
9.52	0 to 0.5	1.0 to 1.5
12.7	0 to 0.5	1.0 to 1.5

Imperial (Wing nut type)

Outer dia. of copper pipe	R410A
6.35	1.5 to 2.0
9.52	1.5 to 2.0
12.7	2.0 to 2.5

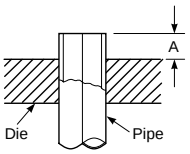

Fig. 10-4-5

- **Flaring size : B (Unit : mm)**

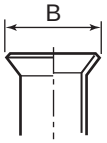

Fig. 10-4-6

Outer dia. of copper pipe	B $^{+0}_{-0.4}$	
	R410A	R22
6.35	9.1	9.0
9.52	13.2	13.0
12.7	16.6	16.2

- In case of flaring for R410A with the conventional flare tool, pull it out approx. 0.5 mm more than that of R22 to adjust to the specified flare size.

  The copper pipe gauge is useful for adjusting projection margin size.

Tightening Connection

Align the centers of the connecting pipes and tighten the flare nut as much as possible with your fingers. Then tighten the nut with a wrench and torque wrench as shown in the figure.

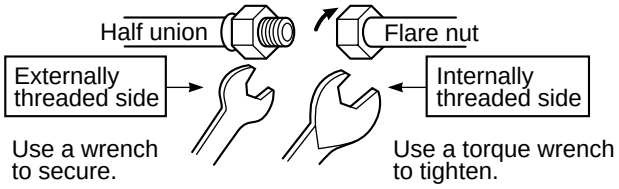

Fig. 10-4-7

CAUTION

- Do not apply excessive force. Otherwise, the nut may break.

(Unit : N·m)

Outer dia. of copper pipe	Tightening torque
Ø6.35 mm	14 to 18 (1.4 to 1.8 kgf•m)
Ø9.52 mm	33 to 42 (3.3 to 4.2 kgf•m)
Ø12.7 mm	50 to 62 (5.0 to 6.2 kgf•m)

- Tightening torque for connection of flare pipe

  The pressure of R410A is higher than R22. (Approx. 1.6 times.) Therefore securely tighten the flare pipes which connect the outdoor unit and the indoor unit with the specified tightening torque using a torque wrench.
  If any flare pipe is incorrectly connected, it may cause not only a gas leakage but also trouble in the refrigeration cycle.

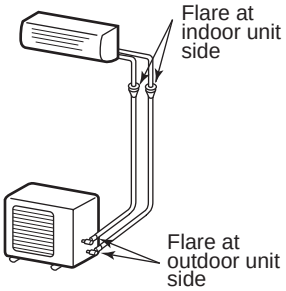

Fig. 10-4-8

10-4-4. Evacuating

After the piping has been connected to the indoor unit, perform the air purge.

AIR PURGE

Evacuate the air in the connecting pipes and in the indoor unit using a vacuum pump.
Do not use the refrigerant in the outdoor unit.

For details, see the vacuum pump manual.

Use a vacuum pump

Be sure to use a vacuum pump with counter-flow prevention function so that oil inside the pump does not flow back into the air conditioner pipes when the pump stops. (If oil inside the vacuum pump enters into the air conditioner circuit which uses R410A, trouble with the refrigeration system may develop.)

1. Connect the charge hose from the manifold valve to the service port of the gas side packed valve.
2. Connect the charge hose to the port of the vacuum pump.
3. Open fully the low pressure side handle of the gauge manifold valve.
4. Operate the vacuum pump to begin evacuating. Perform evacuating for about 15 minutes if the piping length is 20 meters (15 minutes for 20 meters) (assuming a pump capacity of 27 liters per minute).

   Confirm that the compound pressure gauge reading is –101 kPa (–76 cmHg).
5. Close the low pressure valve handle of gauge manifold.
6. Open fully the valve stem of the packed valves (both sides of Gas and Liquid).
7. Remove the charging hose from the service port.
8. Securely tighten the caps on the packed valves.

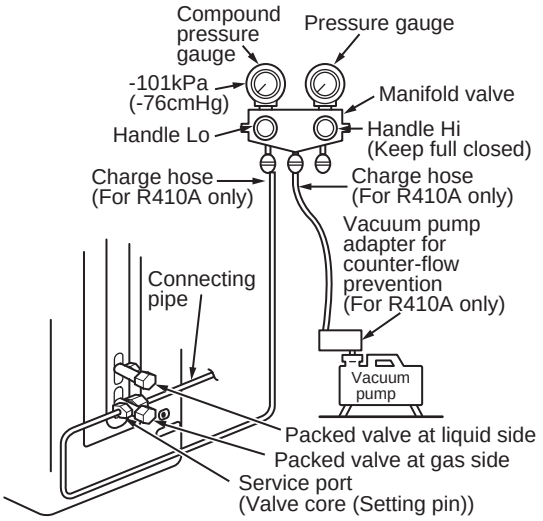

Fig. 10-4-9

CAUTION

- **IMPORTANT POINTS FOR PIPING WORK**

1. Prevent dust and moisture from entering the pipes.
2. Tighten connections carefully (between pipes and unit).
3. Evacuate the air in the connecting pipes using a VACUUM PUMP.
4. Check for gas leaks at all connections.

Packed Valve handling precautions

- Open the valve stem until it touches the stopper. Once it is in contact with the stopper, refrain from applying any more force than is necessary.
- Securely tighten the valve stem cap with torque in the following table:

Gas side (Ø12.7 mm)	50 to 62 N•m (5.0 to 6.2 kgf•m)
Gas side (Ø9.52 mm)	33 to 42 N•m (3.3 to 4.2 kgf•m)
Liquid side (Ø6.35 mm)	14 to 18 N•m (1.4 to 1.8 kgf•m)
Service port	14 to 18 N•m (1.4 to 1.8 kgf•m)

Hexagonal wrench is required.

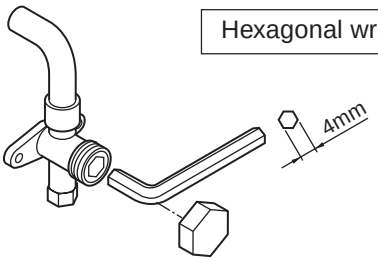

Fig. 10-4-10

10-4-5. Wiring Connection

1. Remove the valve cover, the electric parts cover and the cord clamp from the outdoor unit.
2. Connect the connecting cable to the terminal as identified by the matching numbers on the terminal block of indoor and outdoor unit.
3. Insert the power cord and the connecting cable fully into the terminal block and secure it tightly with screws.
4. Use vinyl tape, etc. to insulate the cords which are not going to be used. Locate them so that they do not touch any electrical or metal parts.
5. Secure the power cord and the connecting cable with the cord clamp.
6. Attach the electric parts cover and the valve cover on the outdoor unit.

Stripping length of connecting cable

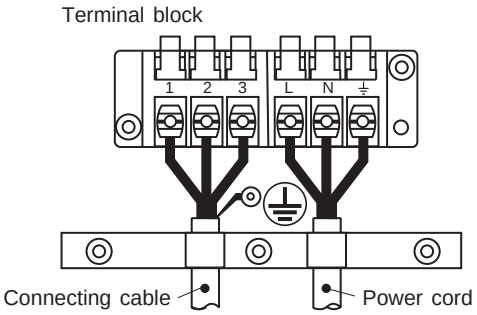

Fig. 10-4-11

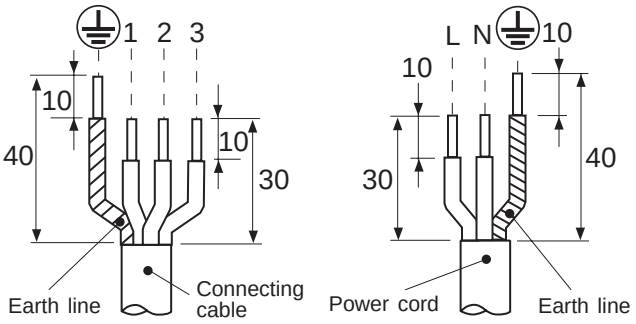

Fig. 10-4-12

Model RAS-	10SAVP-E, 13SAVP-E, 16SAVP-E 10SAVP-ND, 13SAVP-ND, 16SAVP-ND
Power source	220 – 240 V ~50 Hz 220 V ~60 Hz (-E model only)
Maximum running current	12.5 A
Installation fuse rating	16 A breaker or fuse (All types can be used.)
Power cord	H07RN-F or 60245IEC66 (1.5 mm²)
Connection cable	Wire type: H07RN-F or 60245IEC66 (1.0 mm²)

CAUTION

- Incorrect wiring connection may cause electrical parts to burn out.
- Be sure to comply with local regulations/codes when running the wire from outdoor unit to indoor unit.
  (Size of wire and wiring method etc.)
- Every wire must be securely connected.
- If incorrect or incomplete wiring is carried out, fire or smoke may result.
- Prepare the power supply for the exclusive use of the air conditioner.
- This product can be connected to the main breaker.
  Connection to fixed wiring:
  A switch or circuit breaker that can disconnect all poles must be included in the fixed wiring.

10-5. Test Operation

10-5-1. Gas Leak Test

- Check the flare nut connections for gas leaks with a gas leak detector and/or soapy water.

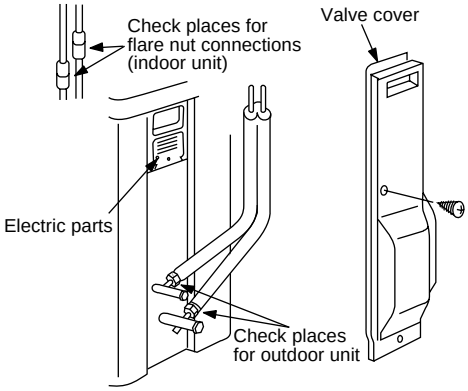

Fig. 10-5-1

10-5-2. Test Operation

To test the system, push and hold RESET button for 10 sec. (There will be one short beep.)

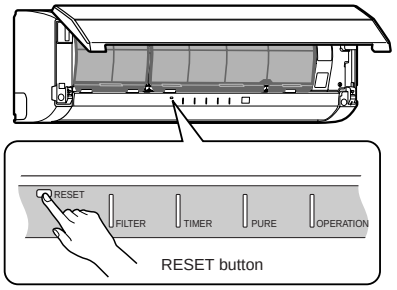

Fig. 10-5-2

10-5-3. Auto Restart Setting

This product is designed so that, after a power failure, it can restart automatically in the same operating mode as before the power failure.

Information

The product was shipped with Auto Restart function in the OFF position.
Turn it ON as required.

How to Set the Auto Restart

- Push and hold the RESET button for about 3 seconds. After 3 seconds, three short electric beeps will be heard to inform you that the Auto Restart has been selected.
- To cancel the Auto Restart, follow the steps described in the section Auto Restart Function on Owner's Manual.

10-5-4. If the air conditioner operates incorrectly

- If two indoor units are installed in the same room or adjoining rooms, when the user tries to operate only one unit, both units may receive the same remote controller signal and operate. This can be prevented by changing one of the indoor units and remote controllers to setting "B"
  (The default setting for both units is "A").
- If the indoor unit and remote controller settings are different, the remote controller signal is not accepted.
  1. Setting the remote controller
     1) Slide open the remote controller cover and remove the batteries.
     2) Cut the jumper wire inside the battery compartment using nippers.
        - The jumper wire should not remain in contact after being cut. Also, be careful not to let plastic scraps, jumper wire cuttings or other debris enter the inside of the remote controller.
     3) Insert the batteries. "B" appears in the remote controller display.
  2. Setting the unit
     Push the RESET button to start automatic operation.
  3. Push the ⏻ button of the remote controller that was set in step 1 to stop the air conditioner.
     (This operation will change the setting to "B".)
  4. Check that the remote controller operates the indoor unit.

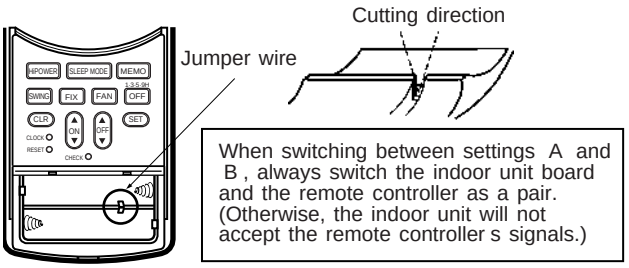

Fig. 10-5-3

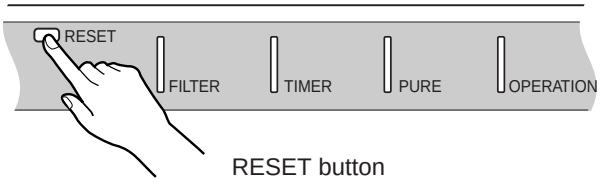

Fig. 10-5-4

11. HOW TO DIAGNOSE THE TROUBLE

The pulse motor circuits are mounted to both indoor and outdoor units.

Therefore, diagnose troubles according to the trouble diagnosis procedure as described below.
(Refer to the check points in servicing written on the wiring diagrams attached to the indoor/outdoor units.)

Table 11-1

No.	Troubleshooting Procedure	Page
1	First Confirmation	70
2	Primary Judgment	71
3	Judgment by Flashing LED of Indoor Unit	71
4	Self-Diagnosis by Remote Controller	72
5	Judgment of Trouble by Every Symptom	75

No.	Troubleshooting Procedure	Page
6	How to Check Simply the Main Parts	80
7	Troubleshooting	81
8	How to Diagnose Trouble in Outdoor Unit	82
9	How to Check Simply the Main Parts	83
10	How to Simply Judge Whether Outdoor Fan Motor is Good or Bad	88

◆ Precautions when handling the new inverter (3DV Inverter)

⚠ CAUTION: HIGH VOLTAGEN

The high voltage circuit is incorporated.

Be careful to do the check service, as the electric shock may be caused in case of touching parts on the P.C. board by hand.

The new inverter (3DV inverter) will be incorporated starting with this unit.

(3DV: 3-shunt Discrete Vector control)

◆ The control circuitry has an uninsulated construction.

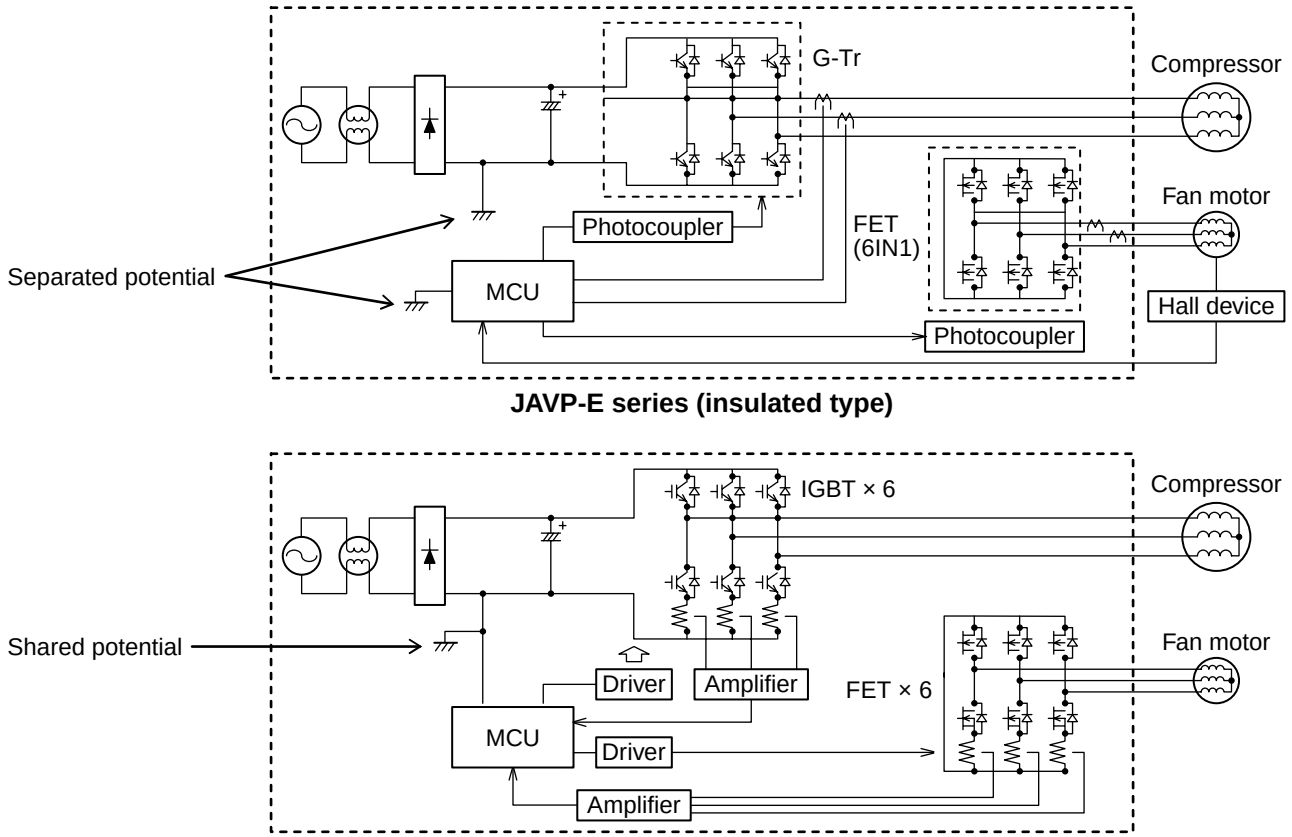

Fig. 11-1

⚠ CAUTION

A high voltage (equivalent to the supply voltage) is also energized to ground through the sensors, PMV and other low-voltage circuits. The sensor leads and other wires are covered with insulated tubes for protection. Nevertheless, care must be taken to ensure that these wires are not pinched.

Take sufficient care to avoid directly touching any of the circuit parts without first turning off the power.

At times such as when the circuit board is to be replaced, place the circuit board assembly in a vertical position.

Laying the board flat on an electrically conductive object (such as the top panel of the air conditioner's outdoor unit) while a charge is still retained by the electrolytic capacitors of the inverter's main circuit may cause short-circuiting between the electrolytic capacitors and secondary circuit components and result in damage to the components.

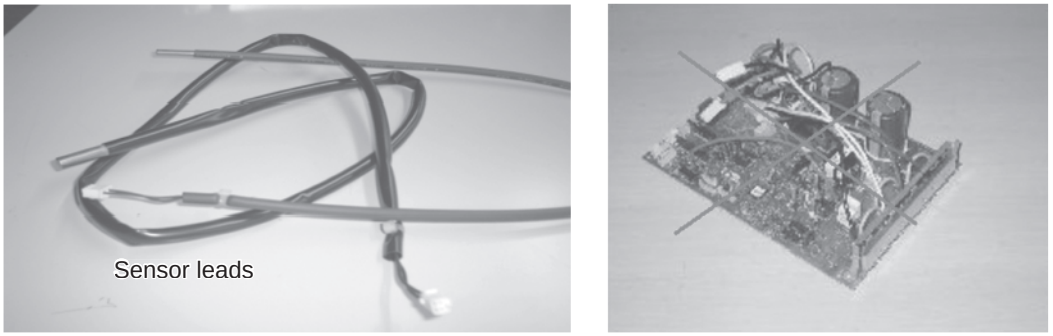

Fig. 11-2

Do NOT lay the circuit board assembly flat.

◆ Precautions when inspecting the control section of the outdoor unit

NOTE :

A large-capacity electrolytic capacitor is used in the outdoor unit controller (inverter). Therefore, if the power supply is turned off, charge (charging voltage DC280 to 380V) remains and discharging takes a lot of time. After turning off the power source, if touching the charging section before discharging, an electrical shock may be caused. Discharge the electrolytic capacitor completely by using soldering iron, etc.

< Discharging method >

1. Remove the inverter cover (plating) by opening four mounting claws.
2. As shown below, connect the discharge resistance (approx. 100Ω40W) or plug of the soldering iron to voltage between + – terminals of the C14 (“CAUTION HIGH VOLTAGE” is indicated.) electrolytic capacitor (500µF/400V) on P.C. board, and then perform discharging.

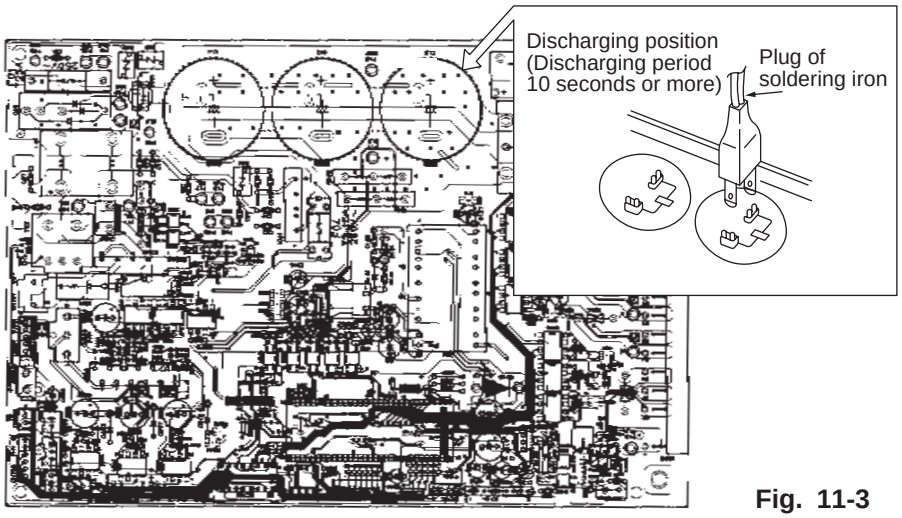

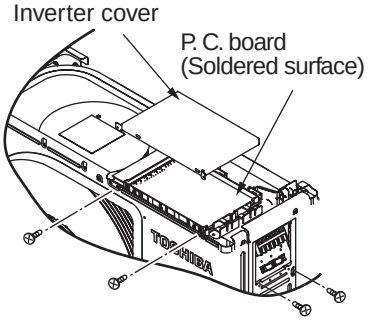

Fig. 11-3

11-1. First Confirmation

11-1-1. Confirmation of Power Supply

Confirm that the power breaker operates (ON) normally.

11-1-2. Confirmation of Power Voltage

Confirm that power voltage is AC 220–230–240 ± 10%.

If power voltage is not in this range, the unit may not operate normally.

11-1-3. Operation Which is not a Trouble (Program Operation)

For controlling the air conditioner, the program operations are built in the microcomputer as described in the following table.

If a claim is made for running operation, check whether or not it meets to the contents in the following table.

When it does, we inform you that it is not trouble of equipment, but it is indispensable for controlling and maintaining of air conditioner.

Table 11-1-1

No.	Operation of air conditioner	Description
1	When power breaker is turned “ON”, the operation indicator (Green) of the indoor unit flashes.	The OPERATION lamp of the indoor unit flashes when power source is turned on. If [START/STOP] button is operated once, flashing stops. (Flashes also in power failure)
2	Compressor may not operate even if the room temperature is within range of compressor-ON.	The compressor does not operate while compressor restart delay timer (3-minutes timer) operates. The same phenomenon is found after power source has been turned on because 3-minutes timer operates.
3	In Dry and SLEEP MODE, FAN (air flow) display does not change even though FAN (air flow select) button is operated.	The air flow indication is fixed to [AUTO].
4	Increasing of compressor motor speed stops approx. 30 seconds after operation started, and then compressor motor speed increases again approx. 30 seconds after.	For smooth operation of the compressor, the compressor motor speed is restricted to Max. 41 rps for 2 minutes, and Max.91 rps for 2 minutes to 3 minutes, respectively after the operation has started.
5	In AUTO mode, the operation mode is changed.	After selecting Cool or Heat mode, select an operation mode again if the compressor keeps stop status for 15 minutes.
6	In HEAT mode, the compressor motor speed does not increase up to the maximum speed or decreases before the temperature arrives at the set temperature.	The compressor motor speed may decrease by high-temp. release control (Release protective operation by temp.-up of the indoor heat exchanger) or current release control.

11-2. Primary Judgment

To diagnose the troubles, use the following methods.

1) Judgment by flashing LED of indoor unit
2) Self-diagnosis by service check remote controller
3) Judgment of trouble by every symptom

Firstly use the method 1) for diagnosis. Then, use the method 2) or 3) to diagnose the details of troubles.

11-3. Judgment by Flashing LED of Indoor Unit

While the indoor unit monitors the operation status of the air conditioner, if the protective circuit operates, the contents of self-diagnosis are displayed with block on the indoor unit indication section.

Table 11-3-1

Indoor indication lamp flashes.

Which lamp does flash?

Item	Check code	Block display	Description for self-diagnosis
A	—	OPERATION (Green) Flashing display (1 Hz)	Power failure (when power is ON)
B	00	OPERATION (Green) Flashing display (5 Hz)	Protective circuit operation for indoor P.C. board
C	01	OPERATION (Green) TIMER (Yellow) Flashing display (5 Hz)	Protective circuit operation for connecting cable and serial signal system
D	02	OPERATION (Green) FILTER (Orange) Flashing display (5 Hz)	Protective circuit operation for outdoor P.C. board
E	03	OPERATION (Green) TIMER (Yellow) FILTER (Orange) Flashing display (5 Hz)	Protective circuit operation for others (including compressor)

NOTES :

1. The contents of items B and C and a part of item E are displayed when air conditioner operates.
2. When item B and C, and item B and a part of item E occur concurrently, priority is given to the block of item B.
3. The check codes can be confirmed on the remote controller for servicing.

11-4. Self-Diagnosis by Remote Controller (Check Code)

1. If the lamps are indicated as shown B to E in Table 11-3-1, execute the self-diagnosis by the remote controller.
2. When the remote controller is set to the service mode, the indoor controller diagnoses the operation condition and indicates the information of the self-diagnosis on the display of the remote controller with the check codes. If a fault is detected, all lamps on the indoor unit will flash at 5Hz and it will beep for 10 seconds
   (Beep, Beep, Beep ...). The timer lamp usually flashes (5Hz) during self-diagnosis.

11-4-1. How to Use Remote Controller in Service Mode

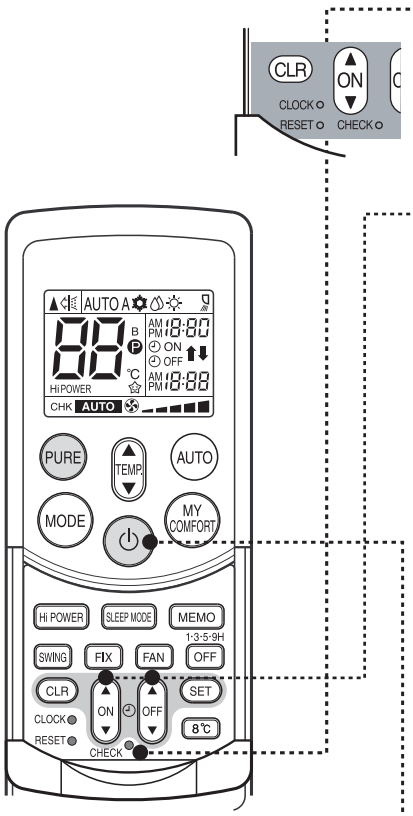

Alphanumeric characters are used for the check codes.

5 is 5.	6 is 6.
A is A.	b is B.
C is C.	d is D.

1 **Push [CHECK] button with a tip of pencil to set the remote controller to the service mode.**

- " 00 " is indicated on the display of the remote controller.

2 **Push [ON ▲] or [OFF ▼] button**

If there is no fault with a code, the indoor unit will beep once (Beep) and the display of the remote controller will change as follows :

→ 00 → 01 → 02 ··· 1d → 1E → 33 ⌐

- The TIMER indicator of the indoor unit flashes continuously. (5 times per 1 sec.)
- Check the unit with all 52 check codes (00 to 33) as shown in Table-11-4-1.
- Push [ON ▲] or [OFF ▼] button to change the check code backward.

If there is a fault, the indoor unit will beep for 10 seconds (Beep, Beep, Beep...).

Note the check code on the display of the remote controller.

- 2-digits alphanumeric will be indicated on the display.
- All indicators on the indoor unit will flash. (5 times per 1 sec.)

3 **Push [START/STOP] button to release the service mode.**

- The display of the remote controller returns to as it was before service mode was engaged.

4 Time shortening method.

1. Push SET button while pushing CHECK button.
2. Push [START/STOP] button.

Fig. 11-4-1

11-4-2. Caution at Servicing

1. After servicing, push the START/STOP button to return to the normal mode.
2. After servicing by the check code, turn off breaker of the power supply, and turn on breaker of the power supply again so that memory in the microcomputer returns the initial status.

   However, the check codes are not deleted even if the power supply is turned off because they are stored in the fixed memory.
3. After servicing, push [CLR] button under check mode status and then send the check code “7F” to the indoor unit. The error code stored in memory is cleared.

Table 11-4-1

Block distinction		Operation of diagnosis function				Judgment and action
Check code	Block	Check code	Cause of operation	Air conditioner status	Remarks	
00	Indoor P.C. board etc.	0C	Short-circuit or disconnection of the room temperature sensor (TA sensor).	Operation continues.	Displayed when error is detected.	1. Check the room temp. sensor. 2. When the room temp. sensor is normal, check P.C. board.
		0d	Being out of place, disconnection, short-circuit, or migration of heat exchanger sensor (TC sensor)	Operation continues.	Displayed when error is detected.	1. Check heat exchanger sensor. 2. When heat exchanger sensor is normal, check P.C. board.
		0F	Being out of place, disconnection, short-circuit, or migration of heat exchanger sensor (TCJ sensor)	Operation continues.	Displayed when error is detected.	1. Check heat exchanger sensor. 2. When heat exchanger sensor is normal, check P.C. board.
		11	Lock of indoor fan or trouble on the indoor fan circuit	All off	Displayed when error is detected.	1. Check the motor. 2. When the motor is normal, check P.C. board.
	Not displayed	12	Trouble on other indoor P.C. boards	Operation continues.	Displayed when error is detected.	Replace P.C. board.
01	Connecting cable and serial signal	04	Return serial signal is not sent to indoor side from operation started. 1) Defective wiring of connecting cable 2) Operation of compressor thermo Gas shortage Gas leak	Operation continues.	Flashes when trouble is detected on Return serial signal, and normal status when signal is reset.	1. When the outdoor unit never operate: 1) Check connecting cable, and correct if defective wiring. 2) Check 25A fuse of inverter P.C. board. 3) Check 3.15A of inverter P.C. board. 2. To display [Other] block during operation, check compressor thermo. operation and supply gas (check gas leak also). 3. Unit operates normally during check. If return serial signal does not stop between indoor terminal board 2 and 3, replace inverter P.C. board. If signal stops between indoor terminal board 2 and 3, replace indoor P.C. board.

Block distinction		Operation of diagnosis function				Judgment and action
Check code	Block	Check code	Cause of operation	Air conditioner status	Remarks	
02	Outdoor P.C. board	14	Inverter over-current protective circuit operates. (Short time)	All off	Displayed when error is detected.	Even if trying operation again, all operations stop immediately. : Replace P.C. board.
		16	Position-detect circuit error or short-circuit between windings of compressor	All off	Displayed when error is detected.	1. Even if connecting lead wire of compressor is removed, position-detect circuit error occurred. : Replace P.C. board. 2. Measure resistance between wires of compressor, and perform short-circuit. : Replace compressor.
		17	Current-detect circuit error	All off	Displayed when error is detected.	Even if trying operation again, all operations stop immediately. : Replace P.C. board.
		18	Being out of place, disconnection or short-circuit of the outdoor heat exchanger sensor (TE) or suction temp. sensor (Ts)	All off	Displayed when error is detected.	1. Check sensors (TE, TS). 2. Check P.C. board.
		19	Disconnection or short-circuit of discharge temp. sensor	All off	Displayed when error is detected.	1. Check discharge temp. sensor (TD). 2. Check P.C. board
		1A	Outdoor fan drive system error	All off	Displayed when error is detected.	Position-detect error, over-current protective operation of outdoor fan drive system, fan lock, etc. : Replace P.C. board or fan motor.
	Not displayed	1b	Being out of place, disconnection or short-circuit of the outdoor temp. sensor (TO)	Operation continues	—	1. Check outdoor temp. sensor (TO). 2. Check P.C. board.
	Outdoor P.C. board	1C	Compressor drive output error, Compressor error (lock, missing, etc.), Break down	All off	Displayed when error is detected.	When 20 seconds passed after start-up, position-detect circuit error occurred. : Replace compressor. Trouble on P.M.V.
03	Others (including compressor)	07	Return serial signal has been sent when operation started, but it is not sent from halfway. 1) Compressor thermo. operation Gas shortage Gas leak 2) Instantaneous power failure	Operation continues	Flashes when trouble is detected on return serial signal, and normal status when signal is reset.	1. Repeat Start and Stop with interval of approx. 10 to 40 minutes. (Code is not displayed during operation.) Supply gas. (Check also gas leak). 2. Unit operates normally during check. If return serial signal does not stop between indoor terminal block 2 and 3, replace inverter P.C. board. If signal stops between indoor terminal block 2 and 3, replace indoor P.C. board.
		1d	Compressor does not rotate. (Current protective circuit does not operate when a specified time passed after compressor had been activated.)	All off	Displayed when error is detected.	1. Trouble on compressor 2. Trouble on wiring of compressor (Missed phase)
		1E	Discharge temp. exceeded 117°C	All off	Displayed when error is detected.	1. Check dischage temp. sensor (TD). 2. Gas leakage 3. Trouble on P.M.V.
		1F	Break down of compressor	All off	Displayed when error is detected.	1. Check power voltage. (220–230–240 V +10%) 2. Overload operation of refrigeration cycle Check installation condition (Short-circuit of outdoor diffuser).
		08	4-way valve inverse error (TC sensor value lowered during heating operation.)	Operation continues	—	1. Check 4-way valve operation.

11-5. Judgment of Trouble by Every Symptom

11-5-1. Indoor Unit (Including Remote Controller)

(1) Power is not turned on (Does not operate entirely)

<Primary check>

1. Is the supply voltage normal?
2. Is the normal voltage provided to the outdoor unit?
3. Is the crossover cable connected properly?
4. Is the fuse (F01) blown?

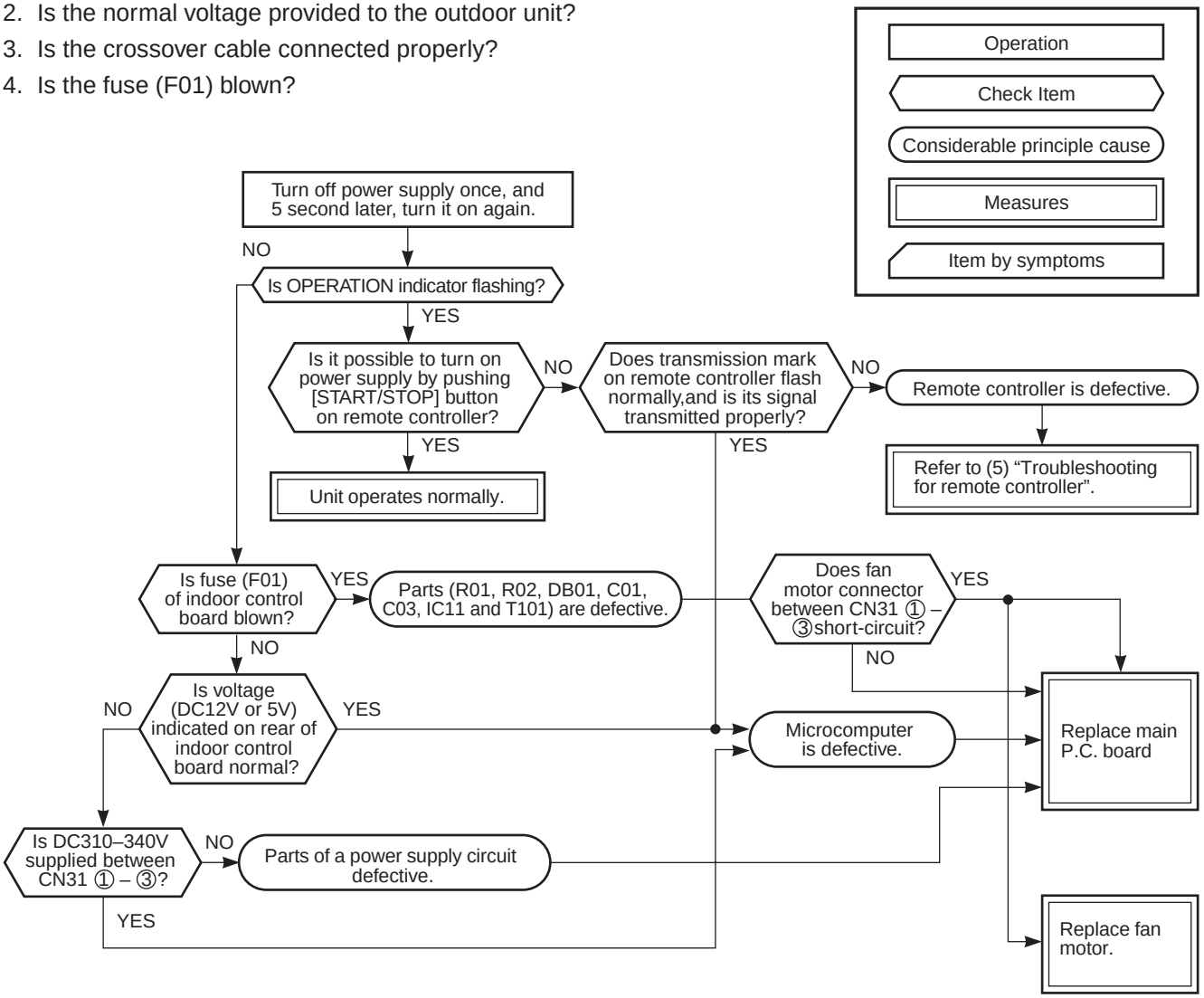

- Be sure to disconnect the motor connector CN10 after shut off the power supply, or it will be a cause of damage of the motor.

(2) Power is not turned on though Indoor P.C. board is replaced

<Confirmation procedure>

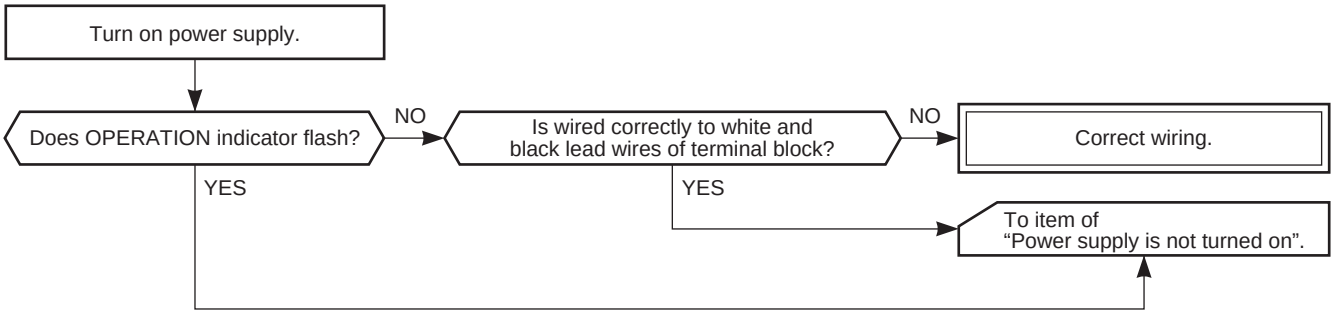

(3) Only the indoor motor fan does not operate

<Primary check>

1. Is it possible to detect the power supply voltage (AC220–240V) between ① and ② on the terminal block?
2. Does the indoor fan motor operate in cooling operation?
   (In heating operation, the indoor fan motor does not operate for approximately 10 minutes after it is turned on, to prevent a cold air from blowing in.)

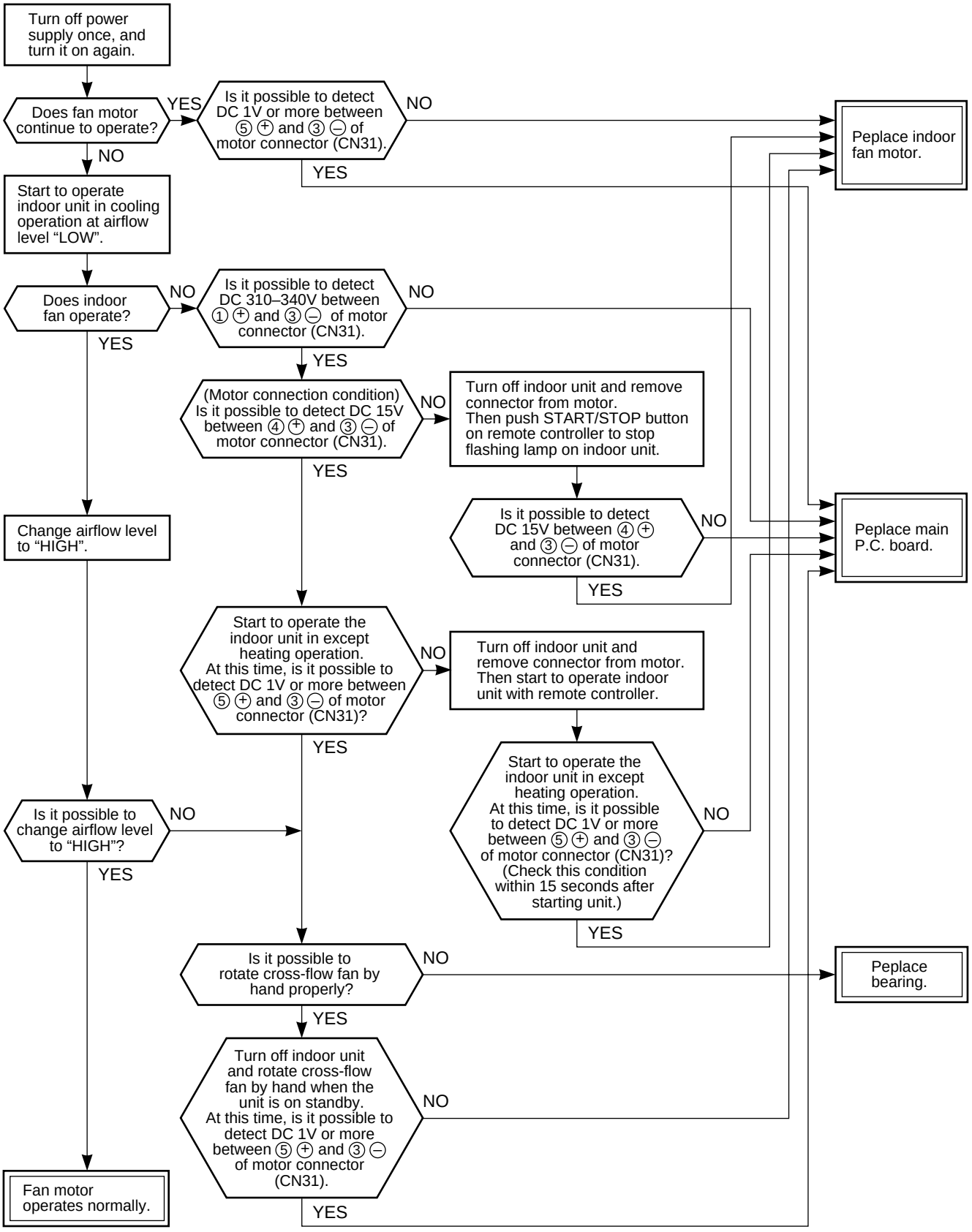

(4) Indoor fan motor automatically starts to rotate by turning on power supply

<Cause>

The IC is built in the indoor fan motor. Therefore the P.C. board is also mounted to inside of the motor.

If the P.C. board is soldered imperfectly or the IC is defective, the fan motor may automatically rotate by turning on power supply.

<Inspection procedure>

1. Remove the front panel. (Remove 2 screws.)
2. Remove the cover of the fan motor lead wires.
3. Check DC voltage with CN31 connector while the fan motor is rotating.

NOTE :

- Do not disconnect the connector while the fan motor is rotating.
- Use a thin test rod.

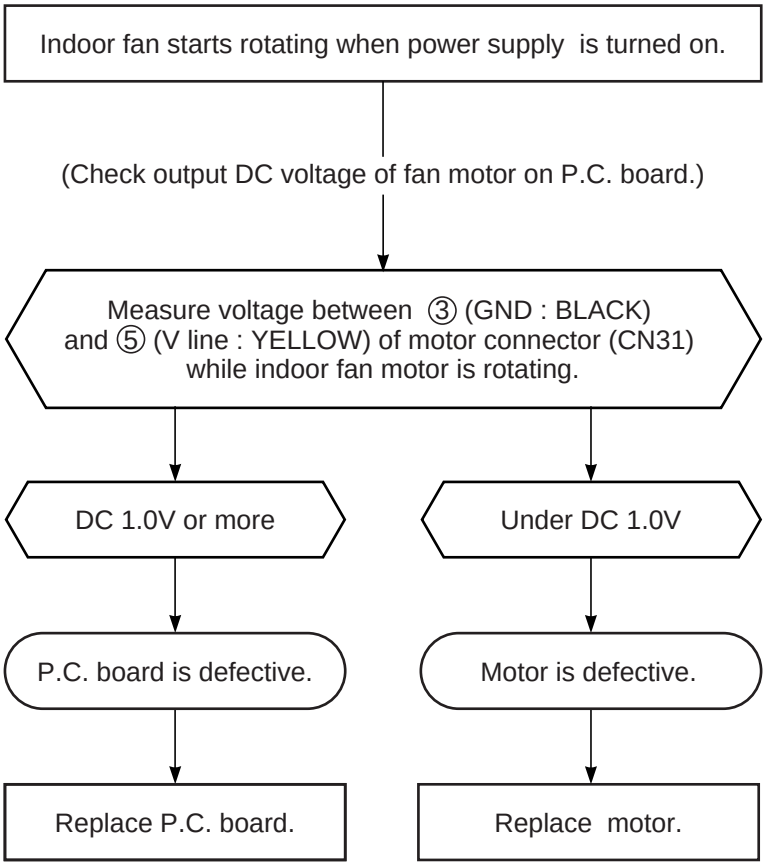

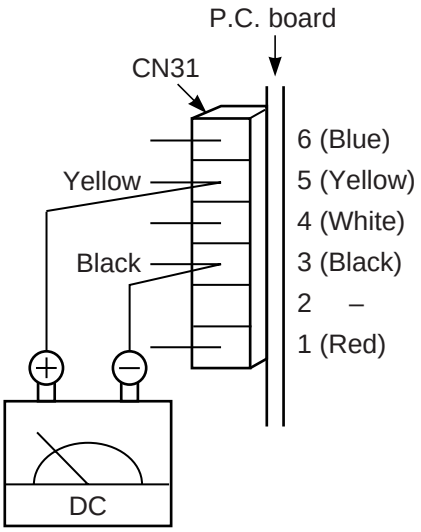

(5) Troubleshooting for remote controller

<Primary check>

Check that A or B selected on the main unit is matched with A or B selected on the remote controller.

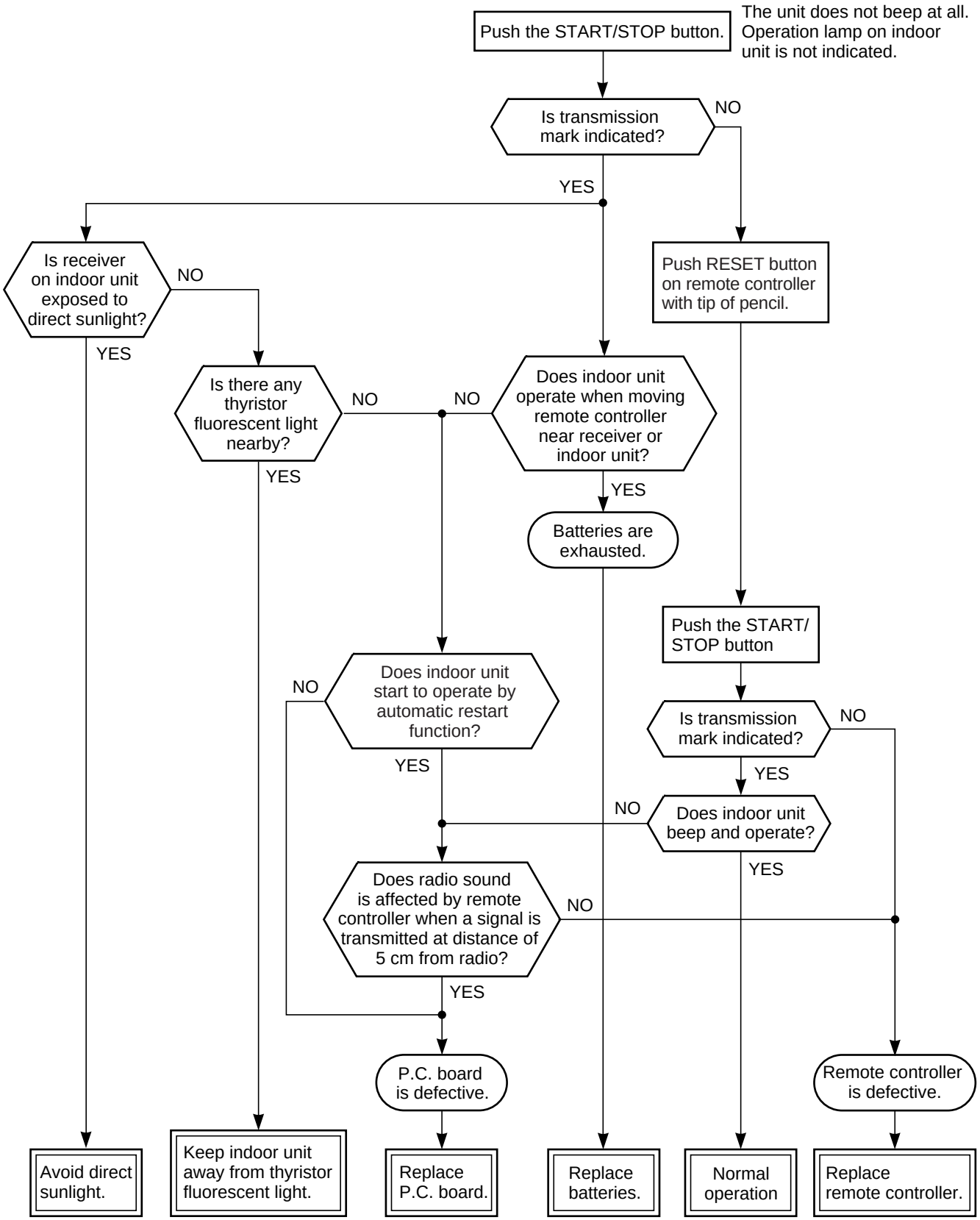

NOTE : After replacing batteries, push the RESET button with a tip of a pencil.

11-5-2. Wiring Failure (Interconnecting and Serial Signal Wire)

(1) Outdoor unit does not operate

1) Is the voltage between ② and ③ of the indoor terminal block varied?
   Confirm that transmission from indoor unit to outdoor unit is correctly performed based upon the following diagram.

NOTE:

- Measurement should be performed 2 minutes and 30 seconds after starting of the operation.
- Be sure to prepare a diode for judgment.

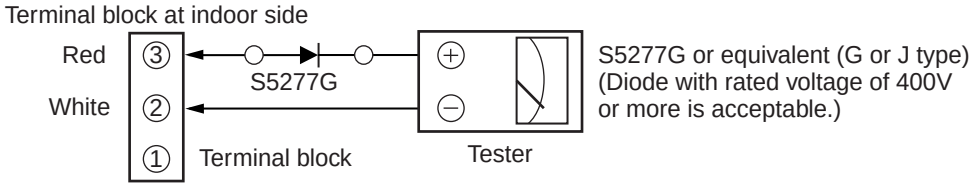

Normal time : Voltage swings between DC15 and 60V. .....Inverter Assembly check (**11-8-1.**)
Abnormal time : Voltage does not vary.

(2) Outdoor unit stops in a little while after operation started

<Check procedure> Select phenomena described below.

1) The outdoor unit stops 10 to 20 minutes after operation started, and 10 minutes or more are required to restart the unit.

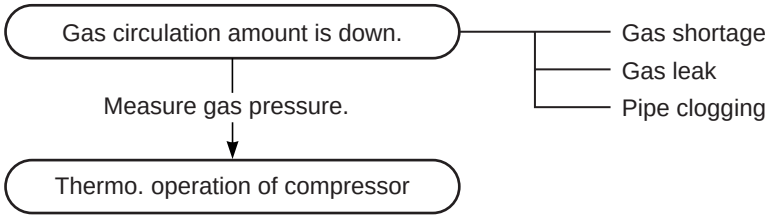

2) If the unit stops once, it does not operate until the power will be turned on again.

To item of Outdoor unit does not operate.

3) The outdoor unit stops 10 minutes to 1 hour after operation started, and an alarm is displayed.
   (Discharge temp. error check code 03, 1E Sensor temp. error check code 02, 1C)

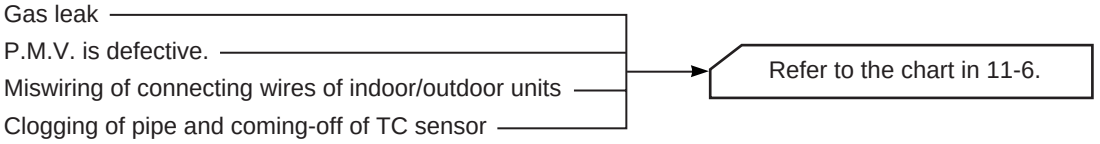

11-6. Check Code 1C (Miswiring in indoor/outdoor units) and 1E

<Check procedure>

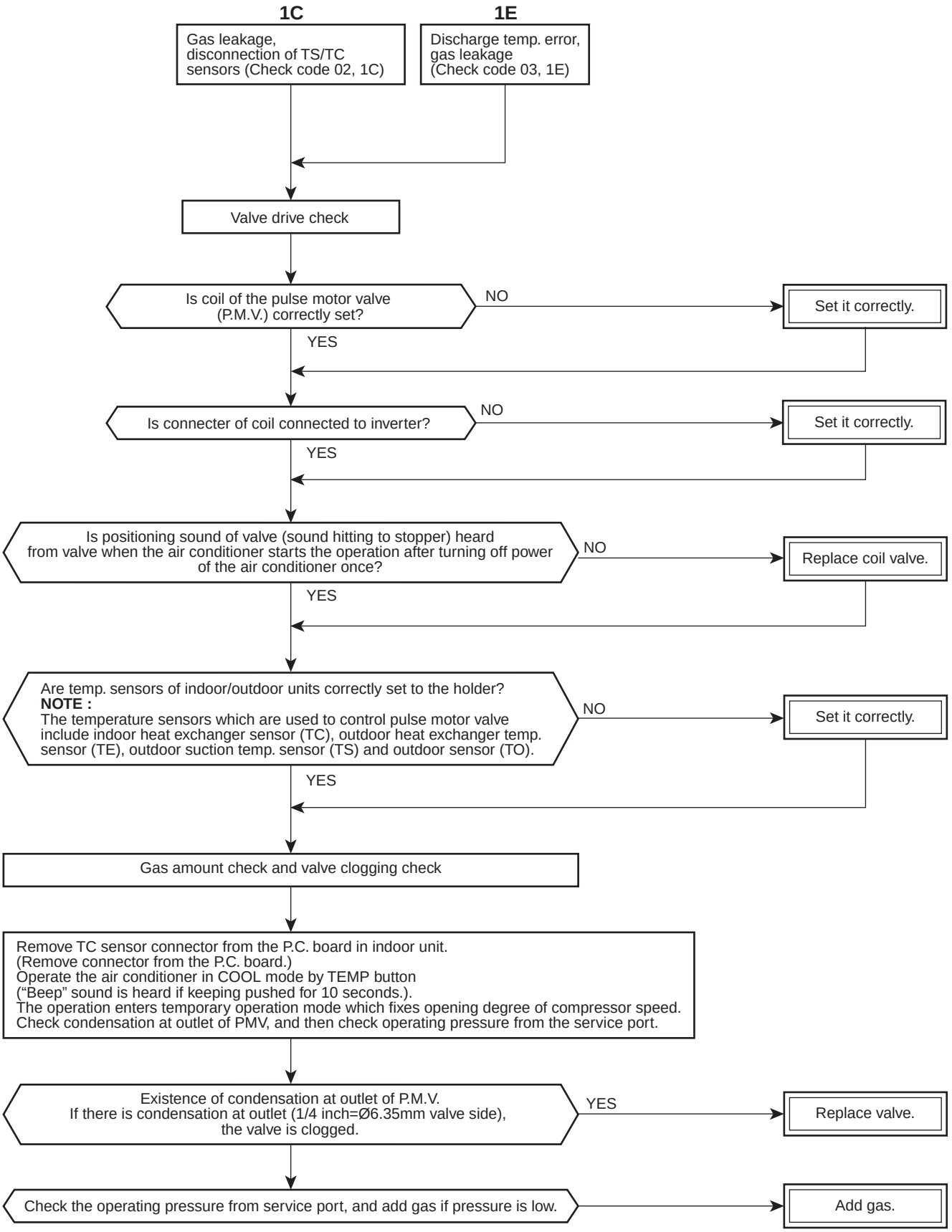

11-7. Troubleshooting

11-7-1. How to Check Whether the Air Purifier is Good or Not

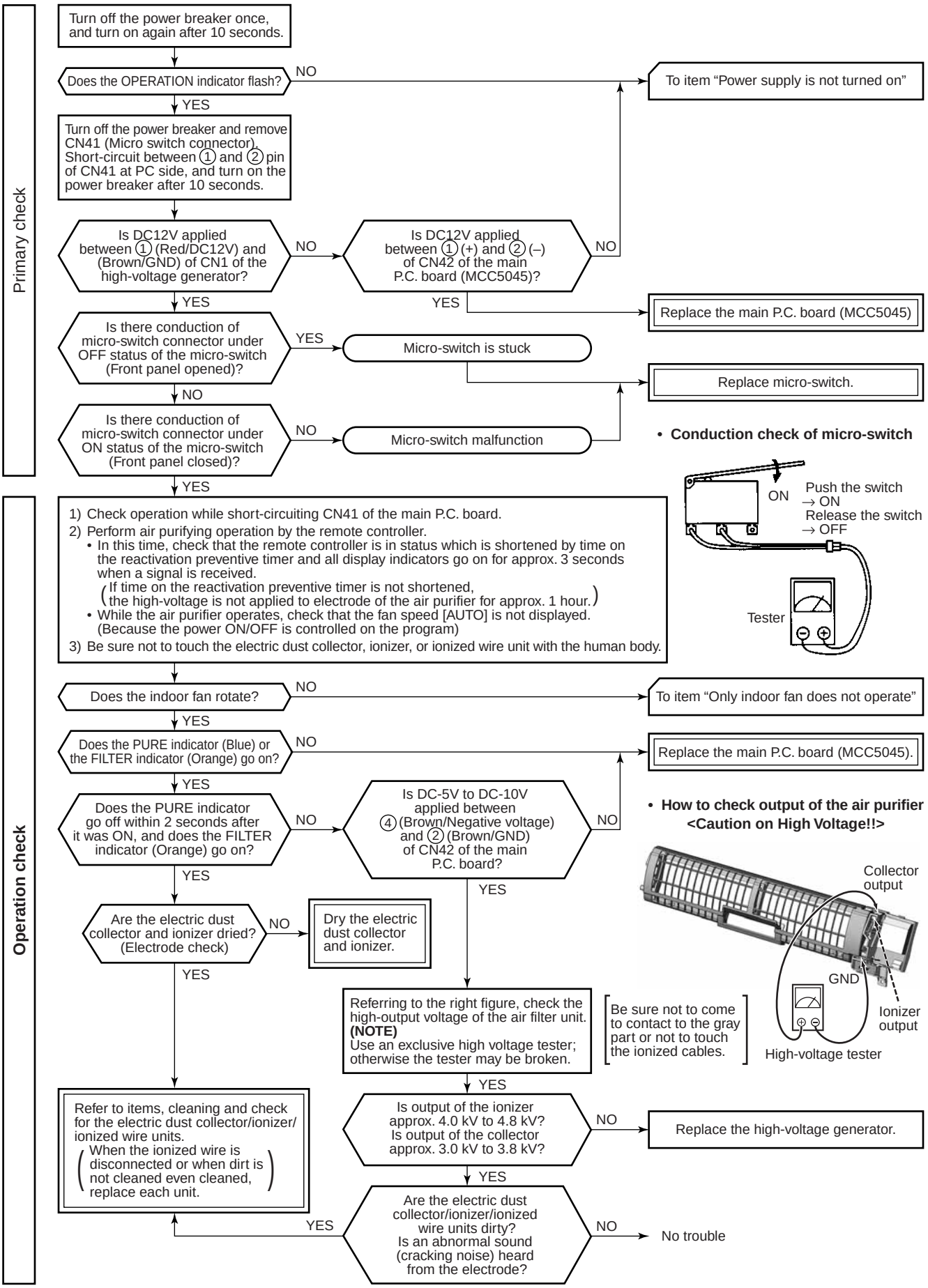

11-8. How to Diagnose Trouble in Outdoor Unit

11-8-1. Summarized Inner Diagnosis of Inverter Assembly

Table 11-8-1

Diagnosis/Process flowchart	Item	Contents	Summary
Remove connector of compressor.	Preparation	Turn “OFF” the power supply breaker, and remove 3P connector which connects inverter and compressor.	
Check 25A fuse (Part No.F01). NG → Replace fuse. → Check electrolytic capacitor, diode block (DB01), etc. OK	Check	• Check whether 25A fuse on the control board assembly is blown or not. (F01)	If fuse was blown, be sure to check the electrolytic capacitor and diode block. (DB01)
Check terminal voltage of electrolytic capacitor. NG → Check electrolytic capacitor, diode (DB01), etc. OK	Check		• Connect discharge resistance (approx. 100Ω, 40W) or soldering iron (plug) between +, – terminals of the electrolytic capacitor (500µF) of C14 (with printed CAUTION HIGH VOLTAGE) on P.C. board. 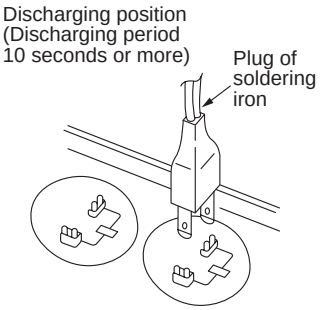
Does outdoor fan rotate? NO → Remove connector CN300 of outdoor fan motor, and using a tester, check resistance value between every phases at motor side. NG → Replace outdoor fan motor. OK → B; YES → A	Operation	Turn on the power breaker, and operate the air conditioner in COOL mode by time shortening.	OK if 500µF → DC280 to 380V
	Measurement	Measure terminal voltage of the electrolytic capacity. 500µF:400WV × 3	Remove CN300 while pushing the part indicated by an arrow because CN300 is a connector with lock. 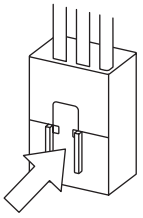
	Check Stop	After operation, turn off the power breaker after 2 minutes 20 seconds passed, and discharge the electrolytic capacitor by soldering iron. Check voltage between motor phases.	
	Check Measurement	• Is not winding between ①-②, ②-③, or ①-③ opened or short-circuited? • Is not frame grounded with ①, ②, or ③?	→ Resistance between phases should be approx. 55 to 77Ω → Should be 10MΩ or more.

Diagnosis/Process flowchart	Item	Contents	Summary
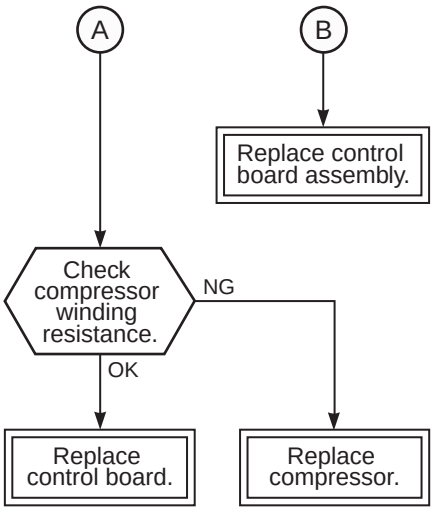	Check	Check winding resistance between phases of compressor, and resistance between outdoor frames by using a tester. • Is not grounded. • Is not short-circuited between windings. • Winding is not opened.	→ OK if 10MΩ or more → OK if 0.51Ω → 0.57Ω (Check by a digital tester.)
	Operation	Remove connector CN300 of the outdoor fan motor, turn on the power supply breaker, and perform the operation. (Stops though activation is prompted.) Check operation within 2 minutes 20 seconds after activation stopped.	

11-9. How to Check Simply the Main Parts

11-9-1. How to Check the P.C. Board (Indoor Unit)

(1) Operating precautions

1) When removing the front panel or the P.C. board, be sure to shut off the power supply breaker.
2) When removing the P.C. board, hold the edge of the P.C. board and do not apply force to the parts.
3) When connecting or disconnecting the connectors on the P.C. board, hold the whole housing. Do not pull at the lead wire.

(2) Inspection procedures

1) When a P.C. board is judged to be defective, check for disconnection, burning, or discoloration of the copper foil pattern or this P.C. board.
2) The P.C. board consists of the following 2 parts

a. Main P.C. board part :

DC power supply circuit (5V, 12V, 15V), Indoor fan motor control circuit, CPU and peripheral circuits, buzzer, and Driving circuit of louver.

b. Indication unit of infrared ray receiving infrared ray receiving circuit, LED :

To check defect of the P.C. board, follow the procedure described below.

(3) Check procedures

Table 11-9-1

No.	Procedure	Check points	Causes
1	Turn off the power supply breaker and remove the P.C. board assembly from electronic parts base. Remove the connecting cables from the terminal block.	Check whether or not the fuse (F01) is blown.	Impulse voltage was applied or the indoor fan motor short-circuited.
2	Remove the connector of the motor and turn on the power supply breaker. If OPERATION indicator flashes (once per second), it is not necessary to check steps (1 to 3) in the right next column.	Check power supply voltage : 1. Between No. 1 and No. 3 of CN01 (AC 220–240V) 2. Between ⊕ and ⊖ of C03 (DC 310–340V) 3. Between ⊖ of C124 and output side of IC13 (DC 15V) 4. Between 12V and GND 5. Between 5V and GND	1. The terminal block or the crossover cable is connected wrongly. 2. The capacitor (C01), line filter (L01), resistor (R02), or the diode (DB01) is defective. 3. IC11, IC13 and T101 are defective. 4. IC11, IC13 and T101 are defective. 5. IC11, IC13, IC14 and T101 are defective.
3	Push [START/STOP] button once to start the unit. (Do not set the mode to On-Timer operation.)	Check power supply voltage : 1. Between CN51 and No. 1 of CN01 (DC 15–60V)	IC51 and IC52 are defective.
4	Shorten the restart delay timer and start unit.	Check whether or not all indicators (OPERATION, TIMER, FILTER, PURE) are lit for 3 seconds and they return to normal 3 seconds later.	The indicators are defective or the housing assembly (CN21) is defective.
5	Push [START/STOP] button once to start the unit, • Shorten the restart delay timer. • Set the operation mode to COOL. • Set the fan speed level to AUTO. • Set the preset temperature much lower than the room temperature. (The unit (compressor) operates continuously in the above condition.)	1. Check whether or not the compressor operates. 2. Check whether or not the OPERATION indicator flashes.	1. The temperature of the indoor heat exchanger is extremely low. 2. The connection of the heat exchanger sensor is loose. (The connector is disconnected.) (CN62) 3. The heat exchanger sensor and the P.C. board are defective. (Refer to Table 11-4-1.) 4. The main P.C. board is defective.
6	If the above condition (No. 5) still continues, start the unit in the following condition. • Set the operation mode to HEAT. • Set the preset temperature much higher than room temperature.	1. Check whether or not the compressor operates. 2. Check whether or not the OPERATION indicator flashes.	1. The temperature of the indoor heat exchanger is extremely high. 2. The connection of the heat exchanger sensor short-circuited. (CN62) 3. The heat exchanger sensor and the P.C. board are defective. (Refer to Table 11-4-1.) 4. The main P.C. board is defective
7	Connect the motor connector to the motor and turn on the power supply. Start the unit the following condition. • Set the fan speed level to HIGH. (The unit (compressor) operates continuously in the above condition in No. 5.)	1. Check it is impossible to detect the voltage (DC 15V) between 3 and 4 of the motor terminals. 2. The motor does not operate or the fan motor does not rotate with high speed. (But it is possible to receive the signal from the remote controller.) 3. The motor rotates but vibrates strongly.	1. The indoor fan motor is defective. (Protected operation of P.C. board.) 2. The P.C. board is defective. 3. The connection of the motor connector is loose.

11-9-2. P.C. Board Layout

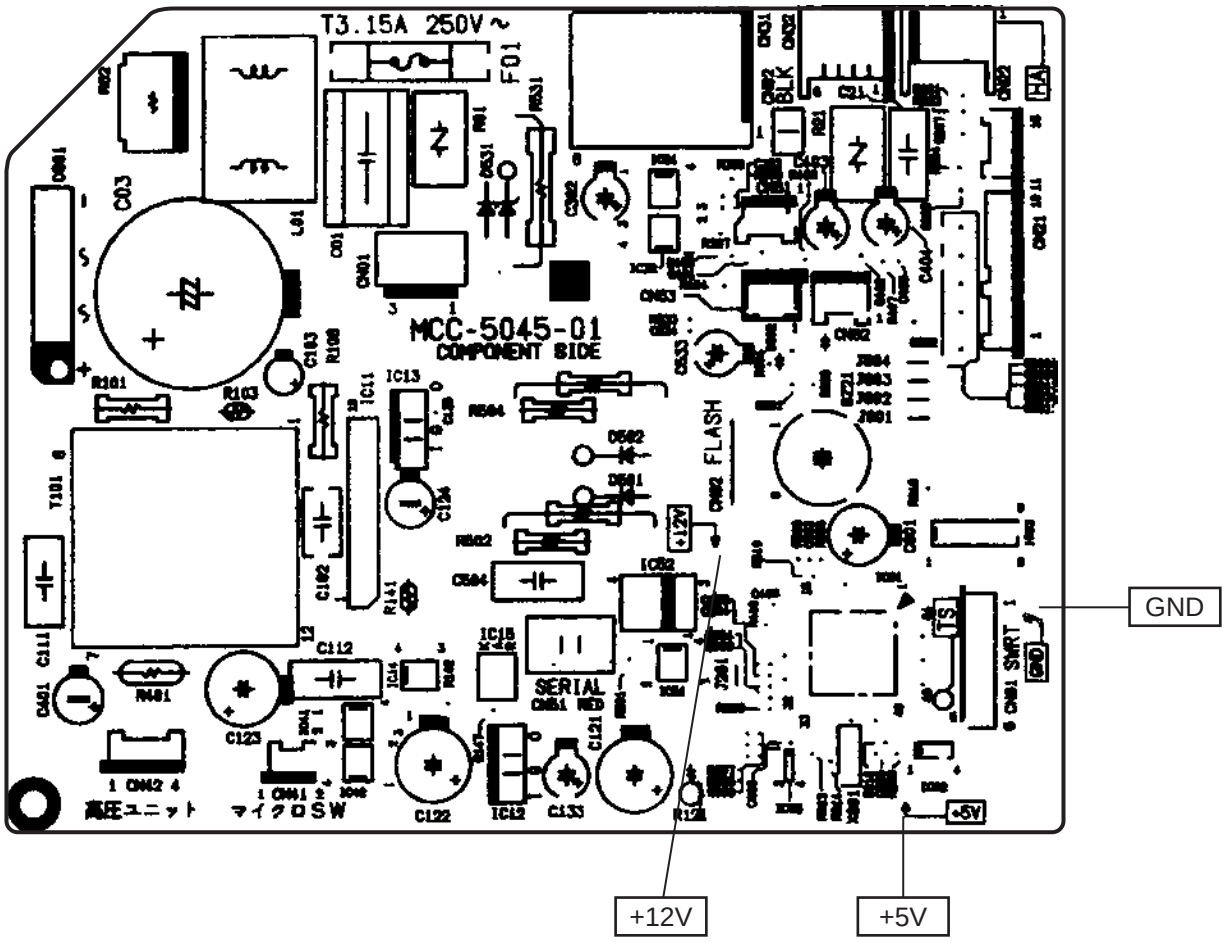

[1] Sensor characteristic table

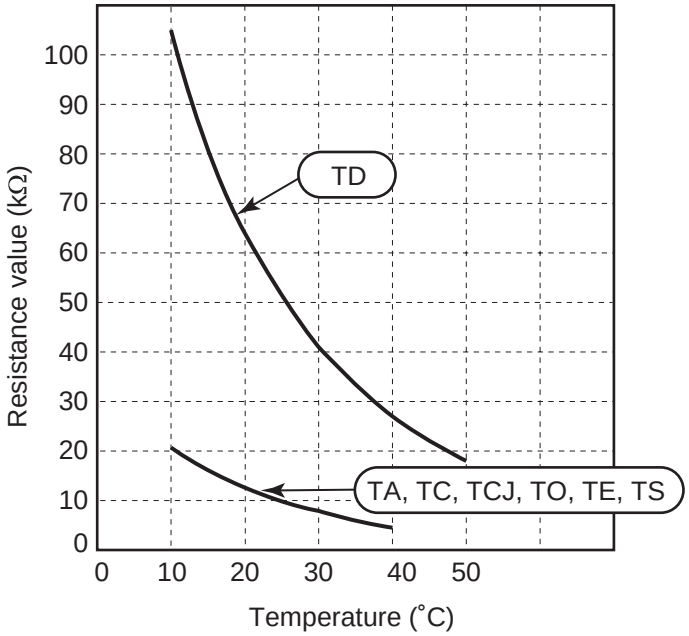

TD : Discharge temp. sensor
TA : Room temp. sensor
TC, TCJ : Heat exchanger temp. sensor
TO : Outdoor temp. sensor
TE : Outdoor heat exchanger temp. sensor
TS : Suction temp. sensor

11-9-3. Indoor Unit (Other Parts)

<table>
<tr><th>No.</th><th>Part name</th><th>Checking procedure</th></tr>
<tr><td>1</td><td>Room temp. (TA) sensor
Heat exchanger (TC) sensor
Heat exchanger (TCJ) sensor</td><td>Disconnect the connector and measure the resistance value with tester.
(Normal temp.)
<table>
<tr><th>Sensor \ Temperature</th><th>10°C</th><th>20°C</th><th>25°C</th><th>30°C</th><th>40°C</th></tr>
<tr><td>TA, TC, TCJ (kΩ)</td><td>20.7</td><td>12.6</td><td>10.0</td><td>7.9</td><td>4.5</td></tr>
</table></td></tr>
<tr><td>2</td><td>Remote controller</td><td>Refer to 11-5-1. (5).</td></tr>
<tr><td>3</td><td>Louver motor
MP24Z3N</td><td>Measure the resistance value of each winding coil by using the tester.
(Under normal temp. 25°C)
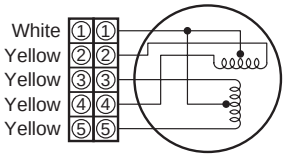

<table>
<tr><th>Position</th><th>Resistance value</th></tr>
<tr><td>1 to 2
1 to 3
1 to 4
1 to 5</td><td>250 ± 20Ω</td></tr>
</table></td></tr>
<tr><td>4</td><td>Indoor fan motor</td><td>Refer to 11-5-1. (3) and (4).</td></tr>
</table>

11-9-4. Outdoor Unit

<table>
<tr><th>No.</th><th>Part name</th><th>Checking procedure</th></tr>
<tr><td>1</td><td>Compressor
(Model : DA111A1F-24F)</td><td>Measure the resistance value of each winding by using the tester.
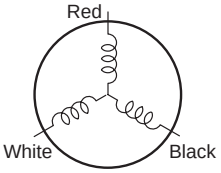

<table>
<tr><th>Position</th><th>Resistance value</th></tr>
<tr><td>Red - White</td><td rowspan="3">1.02 to 1.12Ω</td></tr>
<tr><td>White - Black</td></tr>
<tr><td>Black - Red</td></tr>
</table>
Under 20°C</td></tr>
<tr><td>2</td><td>Outdoor fan motor
(Model : ICF-140-43-4R)</td><td>Measure the resistance value of winding by using the tester.
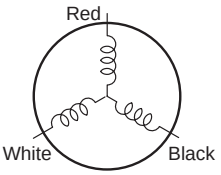

<table>
<tr><th>Position</th><th>Resistance value</th></tr>
<tr><td>Red - White</td><td>20 to 22Ω</td></tr>
<tr><td>White - Black</td><td>20 to 22Ω</td></tr>
<tr><td>Black- Red</td><td>20 to 22Ω</td></tr>
</table>
Under 20°C</td></tr>
<tr><td>3</td><td>4-way valve coil
(Model : STF-01AJ502E1)</td><td>Measure the resistance value of winding by using the tester.
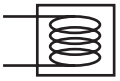
<table>
<tr><th>Resistance value</th></tr>
<tr><td>1435 ± 144Ω</td></tr>
</table>
Under 20°C</td></tr>
<tr><td>4</td><td>Pulse motor valve coil
(Model : CAM-MD12TF-10)</td><td>Measure the resistance value of winding by using the tester.
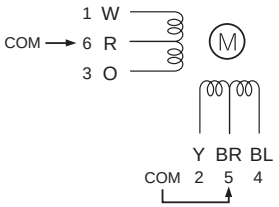

<table>
<tr><th>Position</th><th>Resistance value</th></tr>
<tr><td>Red - White</td><td>42 to 50kΩ</td></tr>
<tr><td>White - Orange</td><td>42 to 50kΩ</td></tr>
<tr><td>Brown- Yellow</td><td>42 to 50kΩ</td></tr>
<tr><td>Brown- Blue</td><td>42 to 50kΩ</td></tr>
</table>
Under 20°C</td></tr>
<tr><td>5</td><td>Outdoor temperature sensor (TO), discharge temperature sensor (TD), suction temperature sensor (TS), outdoor heat exchanger temperature sensor (TE)</td><td>Disconnect the connector, and measure resistance value with the tester.
(Normal temperature)
<table>
<tr><th>Sensor \ Temperature</th><th>10°C</th><th>20°C</th><th>25°C</th><th>30°C</th><th>40°C</th><th>50°C</th></tr>
<tr><td>TD (kΩ)</td><td>100</td><td>64</td><td>50</td><td>41</td><td>27</td><td>18</td></tr>
<tr><td>TO,TS,TE (kΩ)</td><td>20.7</td><td>12.6</td><td>10.0</td><td>7.9</td><td>4.5</td><td>—</td></tr>
</table></td></tr>
</table>

11-9-5. Checking Method for Each Part

<table>
<tr><th>No.</th><th>Part name</th><th>Checking procedure</th></tr>
<tr><td>1</td><td>Electrolytic capacitor
(For boost, smoothing)</td><td>1. Turn OFF the power supply breaker.
2. Discharge all three capacitors completely.
3. Check that safety valve at the bottom of capacitor is not broken.
4. Check that vessel is not swollen or exploded.
5. Check that electrolytic liquid does not blow off.
6. Check that the normal charging characteristics are shown in continuity test by the tester.

 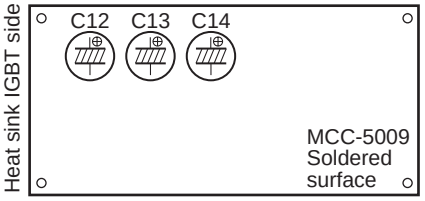

C12, C13, C14 → 500µF/400V

<table><tr><th>Case that product is good</th></tr><tr><td>Pointer swings once, and returns slowly. When performing test once again under another polarity, the pointer should return.</td></tr></table></td></tr>
<tr><td>2</td><td>Diode block</td><td>1. Turn OFF the power supply breaker.
2. Completely discharge the four electrolytic capacitors.
3. Remove the diode block from the PCB (which is soldered in place).
4. Use a multimeter with a pointer to test the continuity, and check that the diode block has the proper rectification characteristics.

 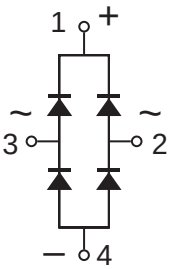

 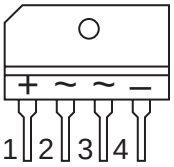

(DBO1)

<table><tr><th colspan="2">Tester rod</th><th rowspan="2">Resistance value in good product</th></tr><tr><td>⊕</td><td>⊖</td></tr><tr><td>~ 2</td><td rowspan="2">+ 1</td><td rowspan="4">∞</td></tr><tr><td>~ 3</td></tr><tr><td rowspan="2">– 4</td><td>~ 2</td></tr><tr><td>~ 3</td></tr></table>10 to 20 Ω when the multimeter probe is reversed</td></tr>
</table>

11-10. How to Simply Judge Whether Outdoor Fan Motor is Good or Bad

1. Symptom

- Outdoor fan motor does not rotate.
- Outdoor fan motor stops within several tens seconds though it started rotating.
- Outdoor fan motor rotates or does not rotate according to the position where the fan stopped, etc.

Remote controller check code “02 : Outdoor block, 1A : Outdoor fan drive system error”

2. Cause

The following causes are considered when the outdoor fan motor does not normally rotate.

1) Mechanical lock of the outdoor fan motor
2) Winding failure of the outdoor fan motor
3) Position-detect circuit failure inside of the outdoor fan motor
4) Motor drive circuit failure of the outdoor P.C. board

3. How to simply judge whether outdoor fan motor is good or bad

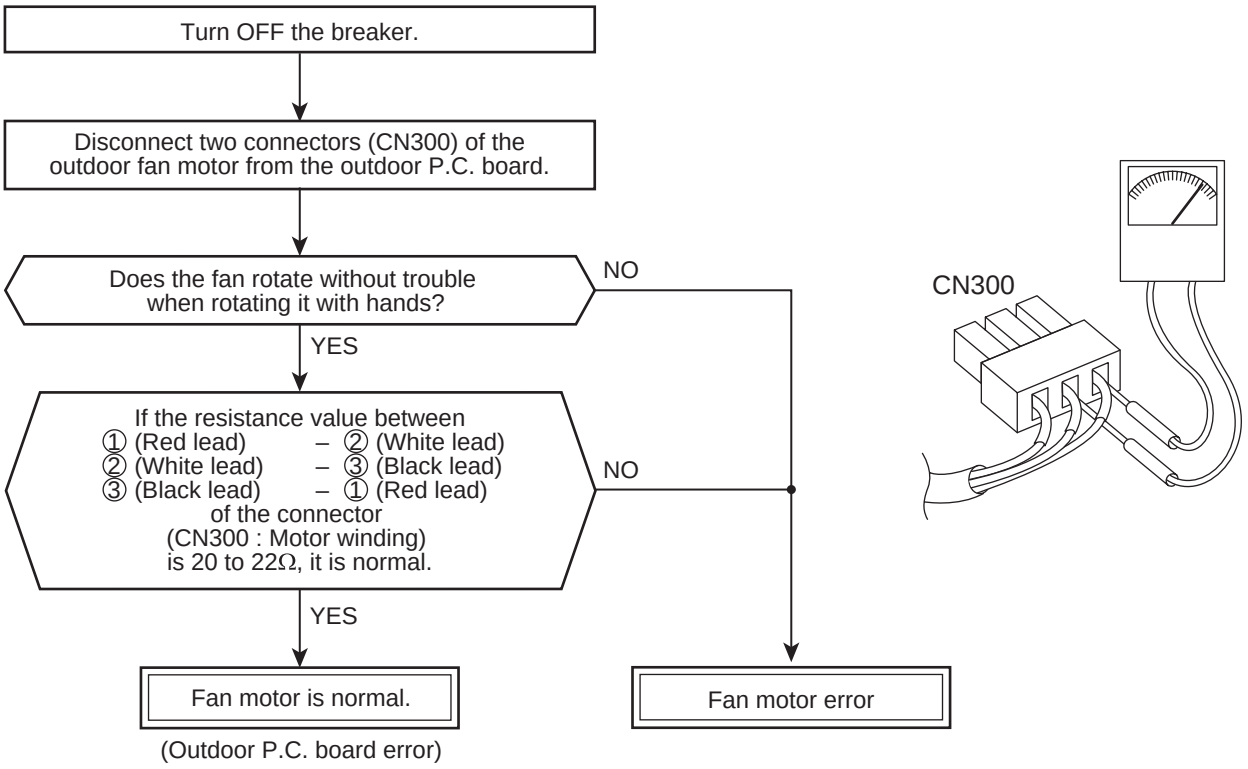

NOTE :

However, GND circuit error inside of the motor may be accepted in some cases when the above check is performed.

When the fan motor does not become normal even if P.C. board is replaced, replace the outdoor fan motor.

12. HOW TO REPLACE THE MAIN PARTS

WARNING

- Since high voltages pass through the electrical parts, turn off the power without fail before proceeding with the repairs.

  Electric shocks may occur if the power plug is not disconnected.
- After the repairs have been completed (after the front panel and cabinet have been installed), perform a test run, and check for smoking, unusual sounds and other abnormalities.

  If this check is omitted, a fire and/or electric shocks may occur.

  Before proceeding with the test run, install the front panel and cabinet.
- Ensure that the following steps are taken when doing repairs on the refrigerating cycle.
  1. Do not allow any naked flames in the surrounding area.

     If a gas stove or other appliance is being used, extinguish the flames before proceeding.

     If the flames are not extinguished, they may ignite any oil mixed with the refrigerant gas.
  2. Do not use welding equipment in an airtight room.

     Carbon monoxide poisoning may result if the room is not properly ventilated.
  3. Do not bring welding equipment near flammable objects.

     Flames from the equipment may cause the flammable objects to catch fire.
- **If keeping the power on is absolutely unavoidable while doing a job such as inspecting the circuitry, wear rubber gloves to avoid contact with the live parts.**

  Electric shocks may be received if the live parts are touched.

  High-voltage circuits are contained inside this unit.

  Proceed very carefully when conducting checks since directly touching the parts on the control circuit board may result in electric shocks.

12-1. Indoor Unit

No.	Part name	Procedures	Remarks
①	Front panel	1) Stop operation of the air conditioner and turn off its main power supply. 2) Open the air inlet grille, push the arm toward the outside, and remove the grille.	
		3) Remove the left and right air filters, and remove the electric dust collector.	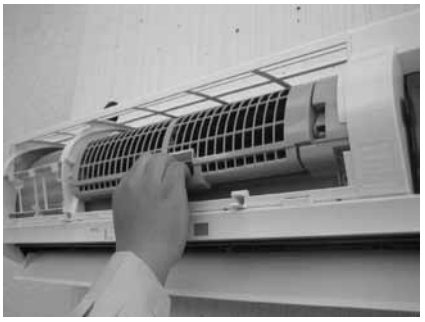

No.	Part name	Procedures	Remarks
①	Front panel	4) Push “PUSH” part under the front panel and remove hooks of the front panel from the installation plate. 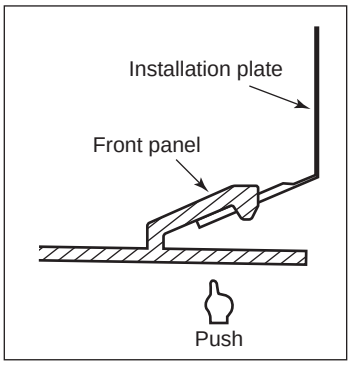 5) Remove the front panel fixing screws. (2 pcs.) 6) Push the electric parts box with the right thumb while pulling the both sides of the front panel toward you.	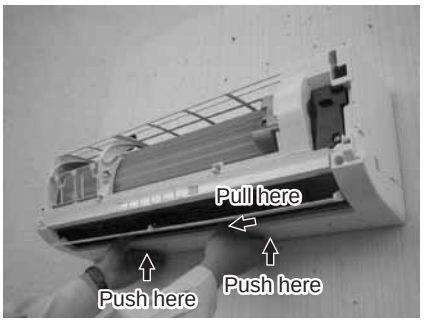 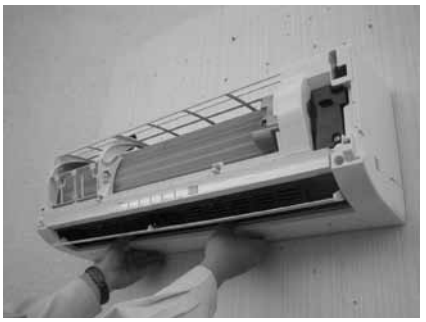

<How to assemble the front panel>

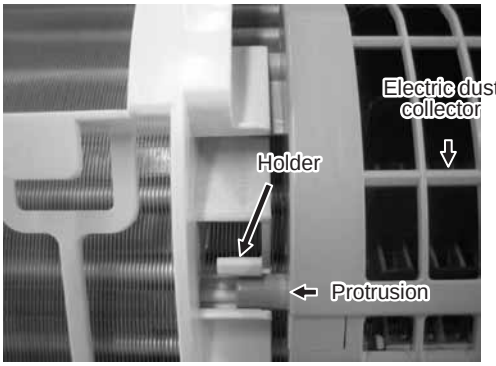

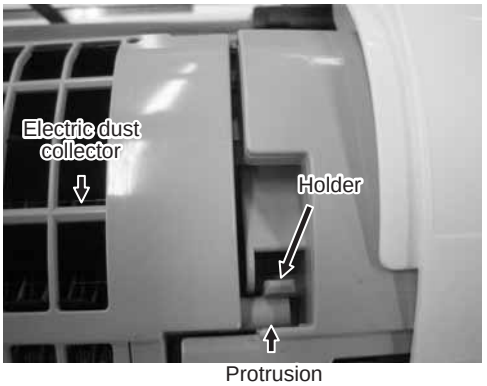

1) Push three center positions and two lower center positions of the air outlet, and then hang the hanging hooks (4 pcs.) at the top side of the front panel to the rear plate.
2) Insert the electric dust collector and left and right air filters.
   Push in the electric dust collector until the protrusions on both sides are completely inserted into the holders.
   If installation is incomplete, the FILTER indicator (orange) may light.
3) Tighten two screws.
   - Incomplete hanging or incomplete pressing may cause a dewdrops or generation of a fluttering sound.

No.	Part name	Procedures	Remarks
②	High voltage generator	1) Follow to the procedure in the item ①. 2) Disconnect the connectors of the high-voltage generator, and disconnect the four leads from where they are fitted into the other components. 3) Remove the fixing screw which secures the high voltage generator, and remove the high voltage generator from the evaporator.	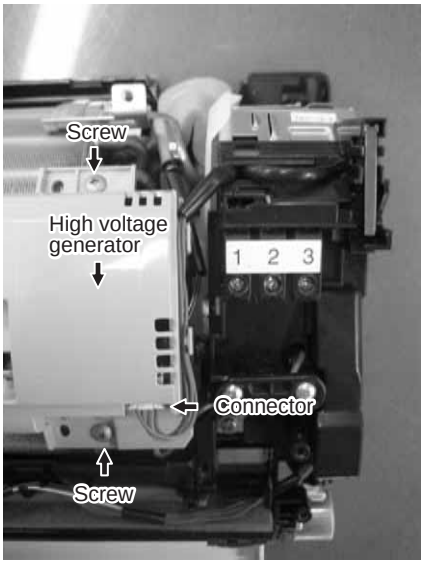
		<How to assemble the high voltage generator> 1) Put the high voltage generator on the evaporator and then fix it with two screws. 2) Pass the leads of the high voltage generator through the area designated and insert them into its connectors.	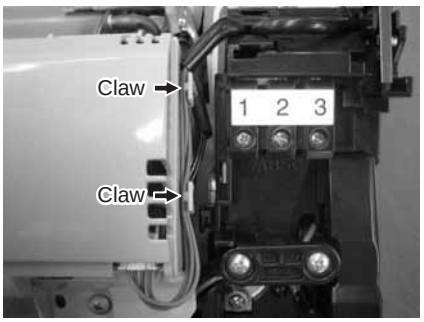

No.	Part name	Procedures	Remarks
③	Electric parts box assembly	1) Follow the procedure up to 4) in ② above. 2) Remove screw of earth lead attached to the end plate of the evaporator. 3) Remove the lead wire cover, and remove connector (5P) for the fan motor and connector (5P) for the louver motor from the electric parts box assembly. 4) Pull out TC and TCJ sensors from sensor holder of the evaporator. 5) Disengage the two claws at the top of the display unit. (They can be easily disengaged by pushing the drain pan above the claws and at the same time pulling the display unit toward you.) 6) Remove the fixing screw that secures the electric parts box assembly, and remove the assembly.	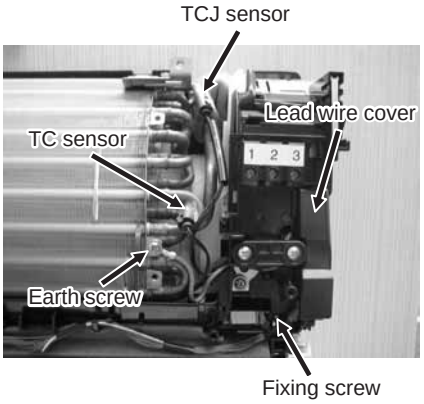 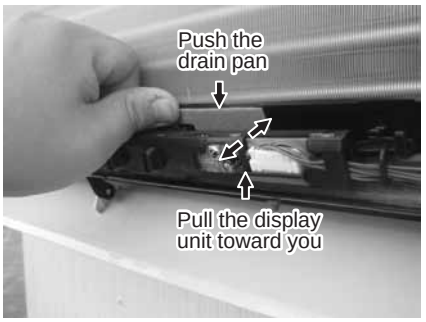
		<How to assemble the electric parts box> 1) Hook the top part of the electric parts box assembly onto the claws on the back body, and secure it using the fixing screw. Now attach the display unit. Connect the connectors for the fan motor and louver motor. 2) Secure the grounding wire using the fixing screw. Insert the TC and TCJ sensors into the sensor holder. * Be absolutely sure to loop the grounding wire, TC and TCJ sensor leads once at the bottom.	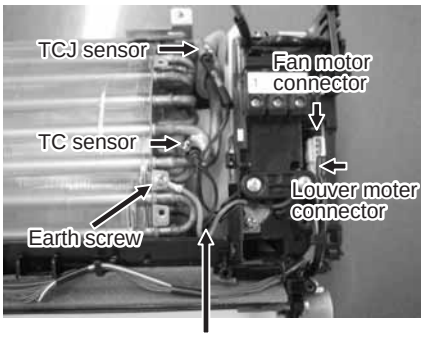

No.	Part name	Procedures	Remarks
④	Horizontal louver	1) Remove shaft of the horizontal louver from the back body. (First remove the left shaft, and then remove other shafts while sliding the horizontal louver leftward.)	
⑤	Evaporator (Heat exchanger)	1) Follow to the procedure in the item ③. 2) Remove the pipe holder from the rear side of the main unit. 3) Remove two fixing screws at the left side of the end plate of the heat exchanger. 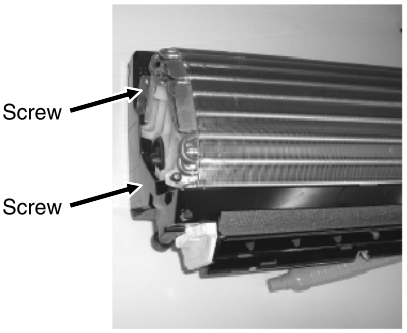 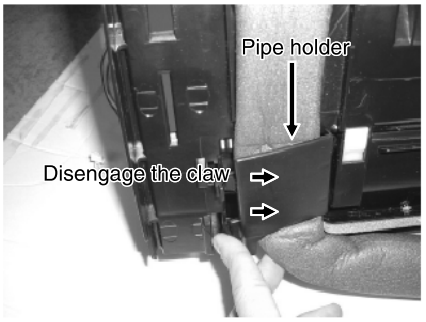 4) Remove the heat exchanger fixing holder by removing the two fixing screws used to secure it. 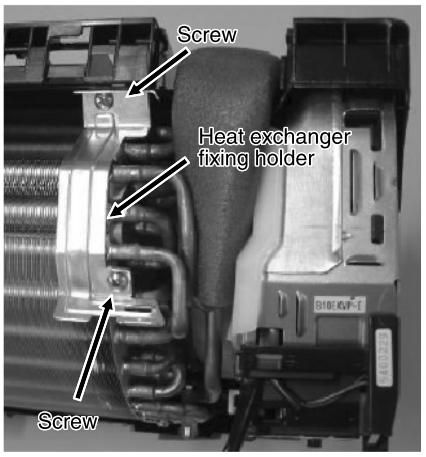 5) Remove right side of the end plate from two fixing ribs while sliding slightly the heat exchanger rightward. 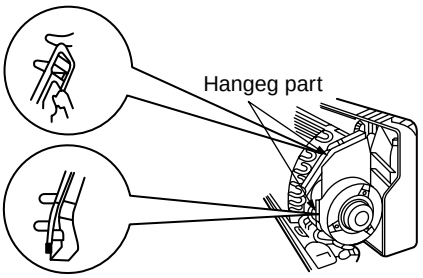	

No.	Part name	Procedures	Remarks
⑥	Bearing	1) Follow to the procedure in the items ①. 2) Remove the two fixing screws used to secure the left edge panel of the heat exchanger, and remove the two screws used to secure the bearing base. 3) Raise the left side of the heat exchanger slightly, and remove the bearing base. **<Caution at assembling>** • If the bearing is out from the housing, push it into the specified position and then incorporate it in the main body. • After assembling the bearing base, check that it is fitted into the stepped part of the drain pipe. 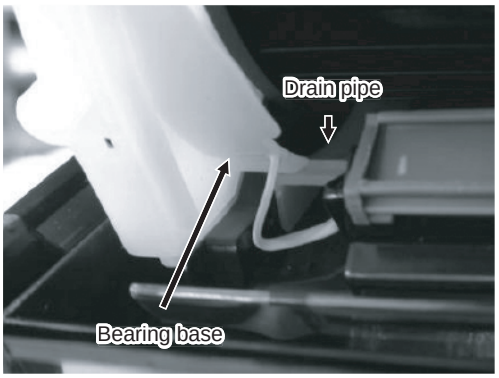 	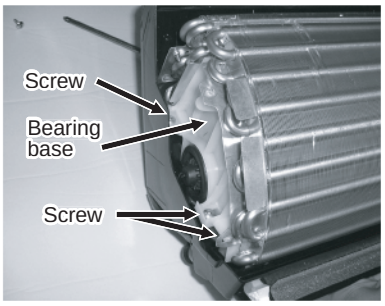 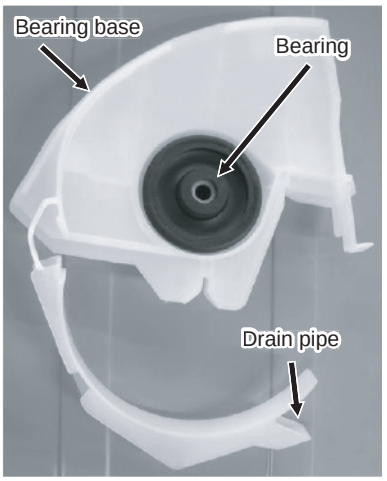

No.	Part name	Procedures	Remarks
⑦	Fan motor	1) Follow to the procedure in the item ③. 2) Loosen the set screw of the cross flow fan. 3) Remove two fixing screws of the motor band (Right), and then remove the motor band (Right). 4) Pull the fan motor outward. In assembling work, install the fan motor as follows. • When assembling the fan motor, the fan motor must be installed in such a way that the fan motor leads will be taken out is positioned at the bottom front. • After assembling the two hooking claws of the motor band (right) into the main body, position the fan motor, insert it, and then secure the motor band (right) using the two fixing screws. 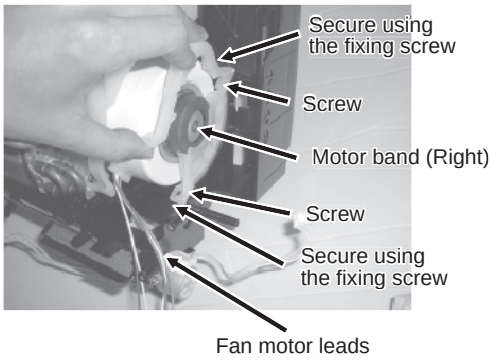 	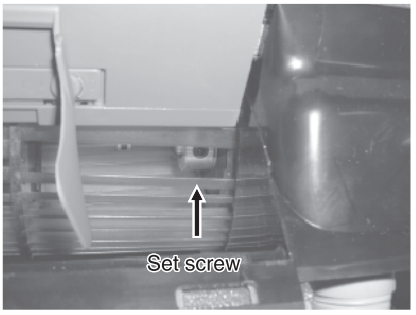
⑧	Cross flow fan	1) Follow to the procedure in the item ⑥. 2) Remove the heat exchanger fixing holder by removing the two fixing screws used to secure it. 3) Loosen the set screw of the cross flow fan. 4) Lift the left side of the heat exchanger, and pull out the cross flow fan.	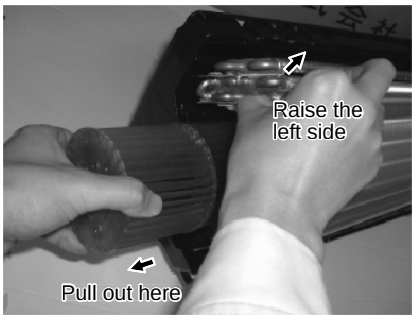

No.	Part name	Procedures	Remarks
⑧	Cross flow fan	**<Caution at reassembling>** 1) At assembling work of the bearing base, check that the drain pipe is surely incorporated in the back body. (Otherwise, water leak is caused.) 2) To incorporate the fan motor, remove the fan motor rubber (at shaft core side), incorporate the motor into the position in the following figure, and then install the fan motor. 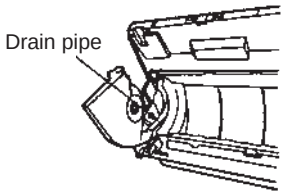 • Install the cross flow fan so that the right end of the 1st joint from the right of the cross flow fan is set keeping 70.5 mm from wall of rear plate of the main unit. • Holding the set screw, install the cross flow fan so that U-groove of the fan motor comes to the mounting hole of the set screw. 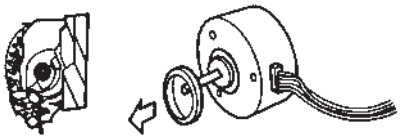 • Perform positioning of the fan motor as follows: • When assembling the fan motor, the fan motor must be installed in such a way that the fan motor leads will be taken out is positioned at the bottom front. • After assembling the two hooking claws of the motor band (right) into the main body, position the fan motor, insert it, and then secure the motor band (right) using the two fixing screws. 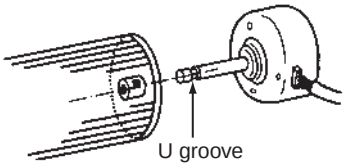 	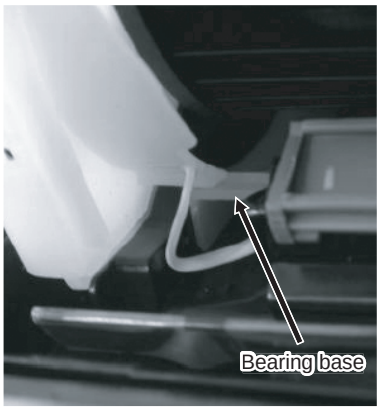 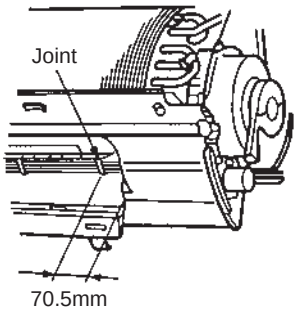

12-2. Microcomputer

No.	Part name	Procedure	Remarks
①	Common procedure	1) Turn the power supply off to stop the operation of air-conditioner. 2) Remove the front panel. • Remove the 2 fixing screws. 3) Remove the electrical part base.	Replace terminal block, microcomputer ass'y and the P.C. board ass'y.

<P.C. board layout>

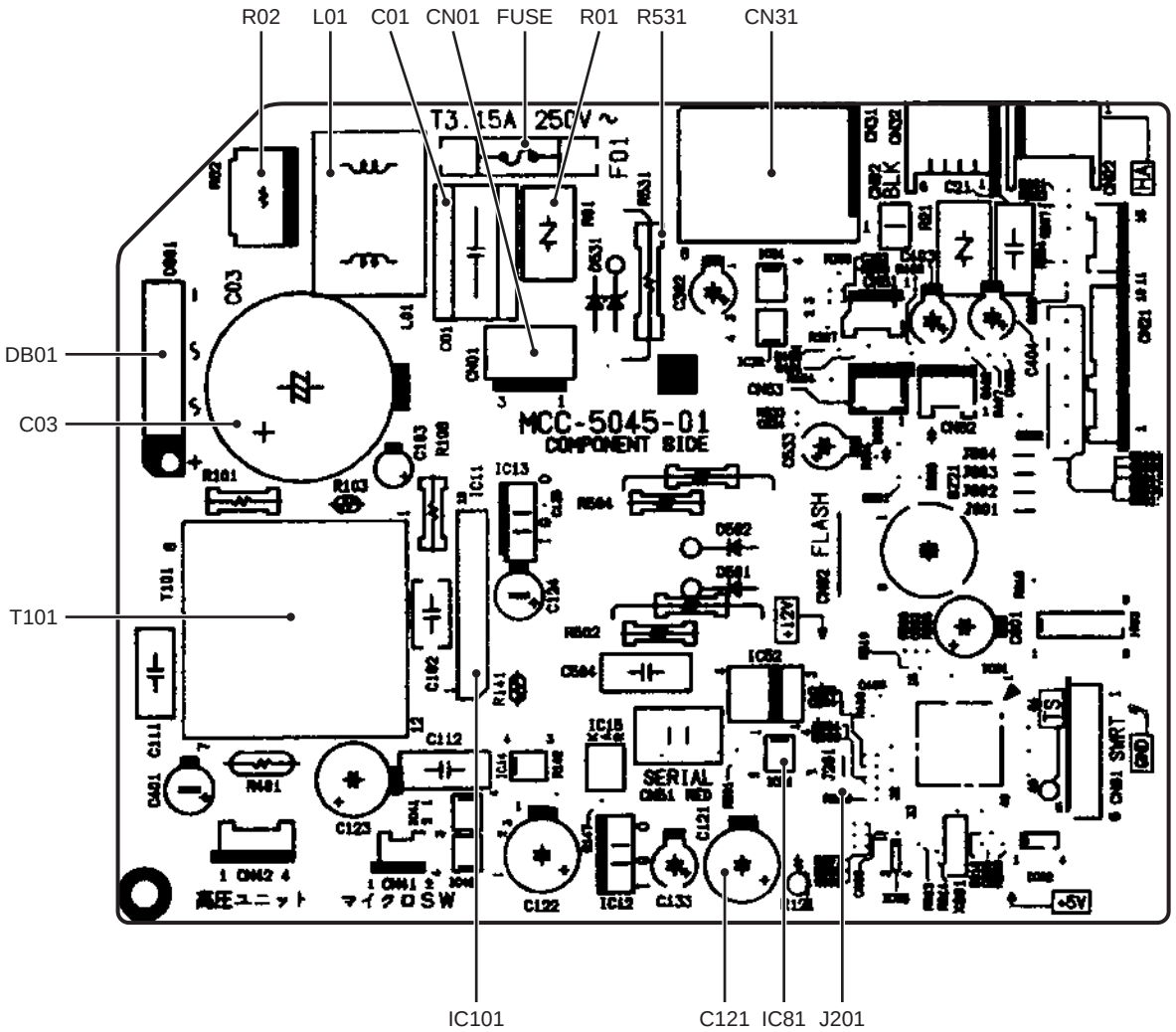

12-3. Outdoor Unit

No.	Part name	Procedure	Remarks
①	Common procedure	**1. Detachment** **NOTE** **Wear gloves for this job. Otherwise, you may injure your hands on the parts, etc.** 1) Stop operation of the air conditioner, and turn off the main switch of the breaker for air conditioner. 2) Remove the valve cover. (ST1TØ4 × 8L 1 pc.) • After removing screw, remove the valve cover pulling it downward. 3) Remove wiring cover (ST1TØ4 × 8L 2 pcs.), and then remove connecting cable. 4) Remove the upper cabinet. (ST1TØ4 × 8L 5 pcs.) • After removing screws, remove the upper cabinet pulling it upward. **2. Attachment** 1) Attach the water-proof cover. **NOTE** **The water-proof cover must be attached without fail in order to prevent rain water, etc. from entering inside the indoor unit.** 2) Attach the upper cabinet. (ST1TØ4 × 8L 5 pcs.) 3) Perform cabling of connecting cable, and attach the wiring cover. • Place the wiring cover over the opening used to work on the connecting wires of the side cabinet, and secure it using the two fixing screws (ST1TØ4 × 8L 2 pcs.). At this point, the top cushion of the wiring cover must be on the inside of the opening. 4) Attach the valve cover. (ST1TØ4 × 8L 1 pc.) • Insert the upper part into the square hole of the side cabinet, set hook claws of the valve cover to square holes (at three positions) of the main unit, and attach it pushing upward.	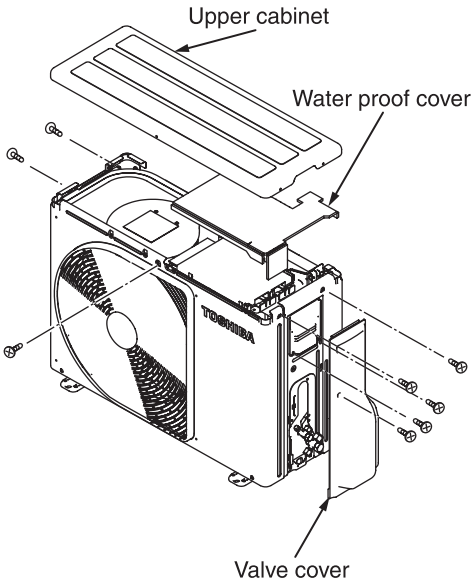 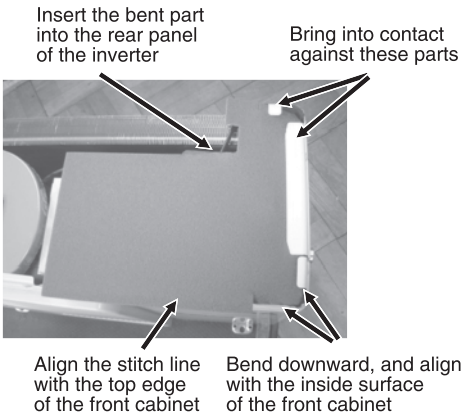 **How to mount the water-proof cover**

No.	Part name	Procedure	Remarks
②	Front cabinet	**1. Detachment** 1) Perform step 1 in ①. 2) Remove the fixing screws (ST1TØ4 × 8L 2 pcs.) used to secure the front cabinet and inverter cover, the screws (ST1TØ4 × 8L 3 pcs.) used to secure the front cabinet at the bottom, and the fixing screws (ST1TØ4 × 8L 2 pcs.) used to secure the motor base. • The front cabinet is fitted into the side cabinet (left) at the front left side so pull up the top of the front cabinet to remove it. **2. Attachment** 1) Insert the claw on the front left side into the side cabinet (left). 2) Hook the bottom part of the front right side onto the concave section of the bottom plate. Insert the claw of the side cabinet (right) into the square hole in the front cabinet. 3) Return the screws that were removed above to their original positions, and attach them.the main unit, and attach it pushing upward.	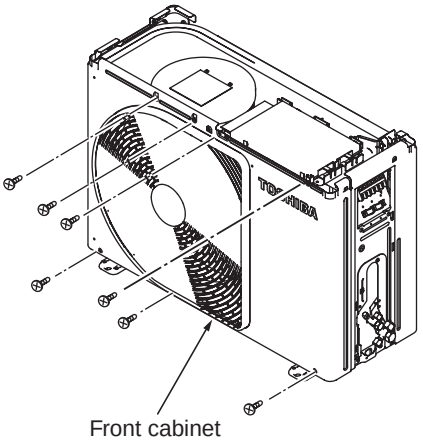 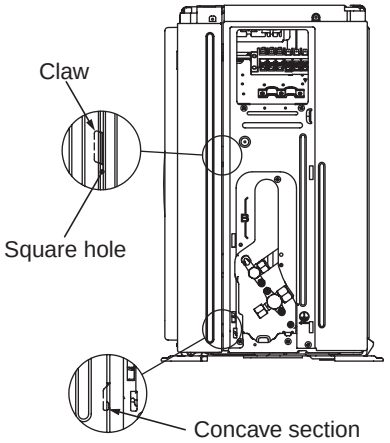

No.	Part name	Procedure	Remarks
③	Inverter assembly	1) Perform work of item 1 in ①. 2) Remove screw (ST1TØ4 × 8L 2 pcs.) of the upper part of the front cabinet. • If removing the inverter cover in this condition, P.C. board can be checked. • If there is no space above the unit, perform work of 1 in ②. **Be careful to check the inverter because high-voltage circuit is incorporated in it.** 3) Perform discharging by connecting ⊕, ⊖ polarity by discharging resistance (approx. 100Ω40W) or plug of soldering iron to ⊕, ⊖ terminals a of the C14 (printed "CAUTION HIGH VOLTAGE" is attached.) electrolytic capacitor (760µF) on P.C. board. **Be careful to discharge the capacitor because the electrolytic capacitor cannot naturally discharge and voltage remains according to trouble type in some cases.** **NOTE** **This capacitor is one with mass capacity. Therefore, it is dangerous that a large spark generates if short-circuiting between ⊕, ⊖ polarity with screwdriver, etc. for discharging.** 4) Remove screw (ST1TØ4 × 8L 2 pcs.) fixing the main body and the inverter box. 5) Remove the front cabinet by performing step 1 in ②, and remove the fixing screws (ST1TØ4 × 8L) for securing the main body and inverter box. 6) Remove various lead wires from the holder at upper part of the inverter box. 7) Pull the inverter box upward. 8) Disconnect connectors of various lead wires. **Requirement** **As each connector has a lock mechanism, avoid to remove the connector by holding the lead wire, but by holding the connector.**	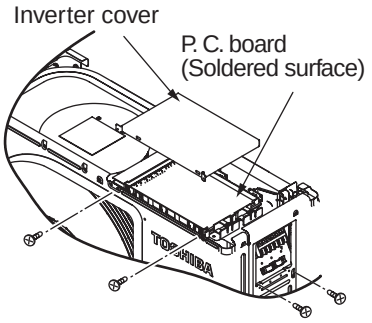 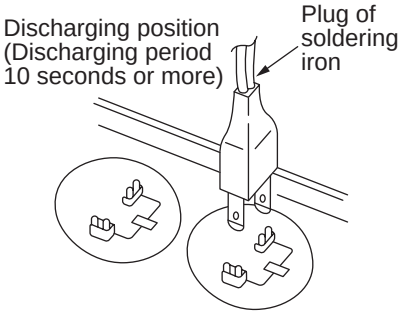 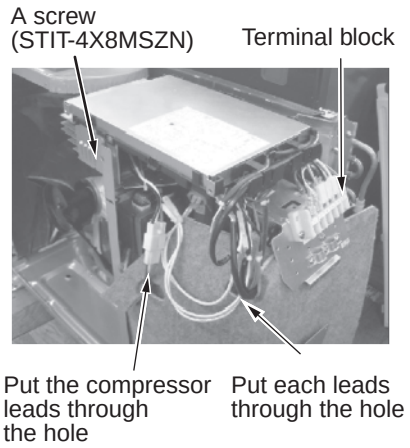 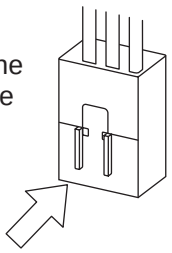 The connector is one with lock, so remove it while pushing the part indicated by an arrow. 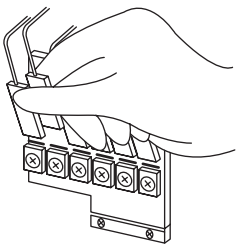 Be sure to remove the connector by holding the connector, not by pulling the lead wire.

No.	Part name	Procedure	Remarks
④	Control board assembly	1. Disconnect the leads and connectors connected to the other parts from the control board assembly. 1) Leads • 3 leads (black, white, orange) connected to terminal block. • Lead connected to compressor : Disconnect the connector (3P). • Lead connected to reactor : Disconnect the two connectors (2P). 2) Connectors (×8) CN300 : Outdoor fan motor (3P: white)* (See **NOTE**) CN701 : 4-way valve (2P: yellow)* CN600 : TE sensor (2P: white)* CN700 : PMV (6P: white) CN603 : TS sensor (3P: white)* CN601 :TD sensor (3P: white)* CN602 : TO sensor (2P: white) CN703: Freeze prevention heater (2P: red) **NOTE** These connectors have a disconnect prevention mechanism: as such, the lock on their housing must be released before they are disconnected. 2. Remove the control board assembly from the P.C. board base. (Remove the heat sink and control board assembly while keeping them screwed together.) **NOTE** Disengage the four claws of the P.C. board base, hold the heat sink, and lift to remove it. 3. Remove the two fixing screws used to secure the heat sink and control board assembly. 4. Mount the new control board assembly. **NOTE** When mounting the new control board assembly, ensure that the P.C. board is inserted properly into the P.C. board support groove.	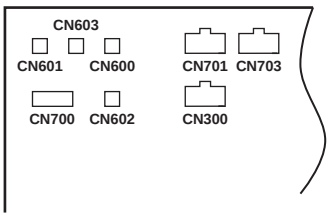 CN300, CN701, CN703, CN600 and CN603 are connectors with locking mechanisms: as such, to disconnect them, they must be pressed in the direction of the arrow while pulling them out. 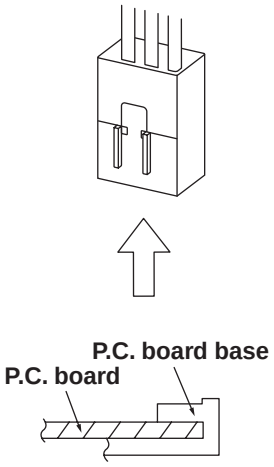

No.	Part name	Procedure	Remarks
⑤	Side cabinet	**1. Side cabinet (right)** 1) Perform step 1 in ② and all the steps in ③. 2) Remove the fixing screw (ST1TØ4 × 8L 5 pcs.) used for securing the side cabinet to the bottom plate and valve fixing panel. **2. Side cabinet (left)** 1) Perform step 1 in ②. 2) Remove the fixing screw (ST1TØ4 × 8L 1 pcs.) used to secure the side cabinet (left) onto the heat exchanger. 3) Remove the fixing screw (ST1TØ4 × 8L 2 pc.) used for securing the side cabinet to the bottom plate and heat exchanger.	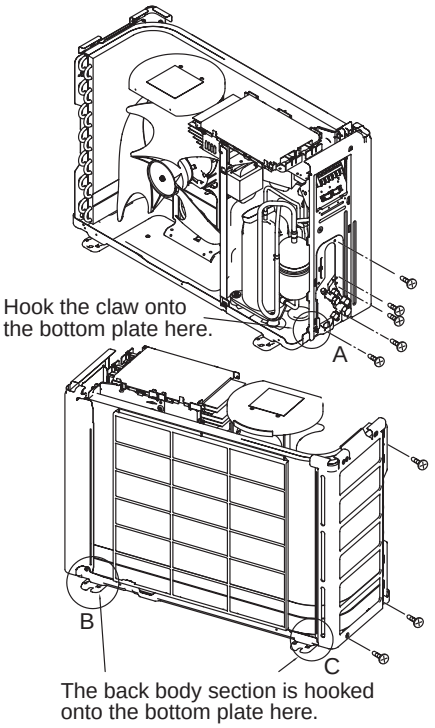 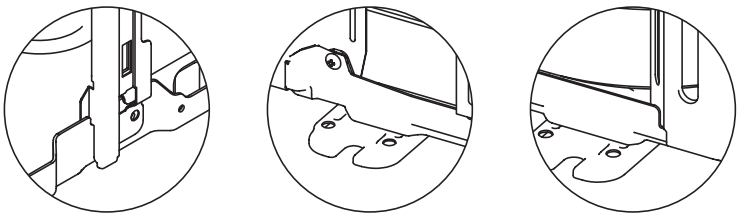 Detail A Detail B Detail C
⑥	Fan motor	1) Perform work of item 1 of ① and ②. 2) Remove the flange nut fixing the fan motor and the propeller. • Flange nut is loosened by turning clockwise. (To tighten the flange nut, turn counterclockwise.) 3) Remove the propeller fan. 4) Disconnect the connector for fan motor from the inverter. 5) Remove the fixing screws (2 pc.) holding by hands so that the fan motor does not fall. * Precautions when assembling the fan motor Tighten the flange nut using a tightening torque of 4.9 N•m.	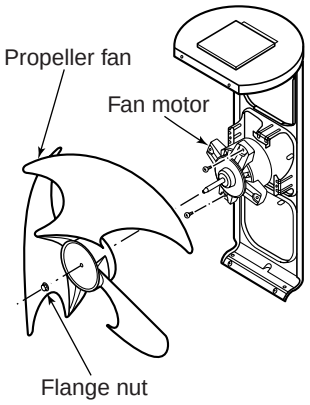

No.	Part name	Procedure	Remarks
⑦	Compressor	1) Perform work of item 1 of ① and ②, ③, ④, ⑤. 2) Extract refrigerant gas. 3) Remove the partition board. (ST1TØ4 × 8L 3 pcs.) 4) Remove the sound-insulation material. 5) Remove terminal cover of the compressor, and disconnect lead wire of the compressor from the terminal. 6) Remove pipe connected to the compressor with a burner. • Take care to keep the 4-way valve away from naked flames. (Otherwise, it may malfunction.) 7) Remove the fixing screw of the bottom plate and heat exchanger. (ST1TØ4 × 8L 1 pc.) 8) Remove the fixing screw of the bottom plate and valve fixing plate. (ST1TØ4 × 8L 1 pc.) 9) Pull upward the refrigeration cycle. 10) Remove BOLT (3 pcs.) fixing the compressor to the bottom plate. * <u>Precautions when assembling the compressor.</u> Tighten the compressor bolts using a tightening torque of 4.9 N•m.	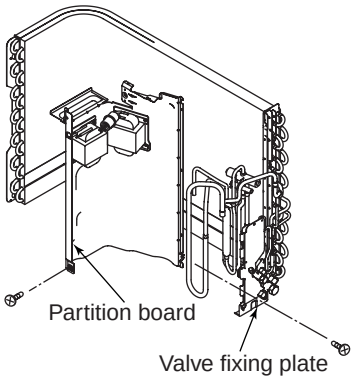 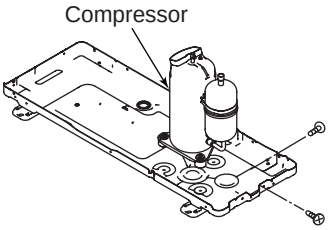
⑧	Reactor	1) Perform work of item 1 of ②, and ③. 2) Remove screws fixing the reactor. (ST1TØ4 × 8L 4 pcs.)	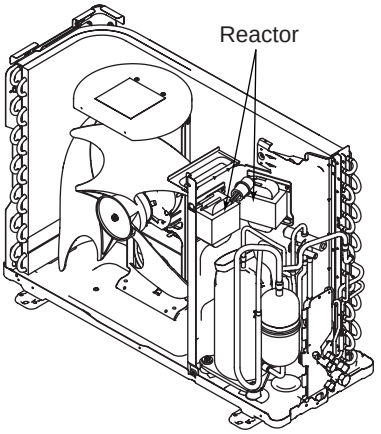

No.	Part name	Procedure	Remarks
⑨	Electronic expansion valve coil	**1. Detachment** 1) Perform step 1 in ②, all the steps in ③ and 1 in ⑤. 2) Remove the coil by pulling it up from the electronic control valve body. **2. Attachment** 1) When assembling the coil into the valve body, ensure that the coil anti-turn lock is installed properly in the pipe. **<Handling precaution>** When handling the parts, do not pull the leads. When removing the coil from the valve body, use your hand to secure the body in order to prevent the pipe from being bent out of shape.	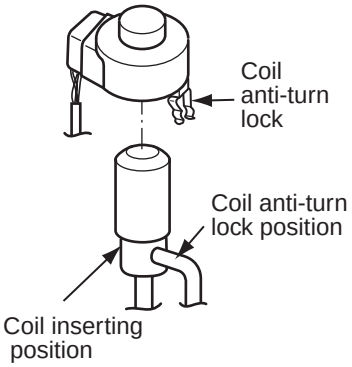
⑩	Fan guard	**1. Detachment** 1) Perform work of item 1 of ②. 2) Remove the front cabinet, and put it down so that fan guard side directs downward. **Perform work on a corrugated cardboard, cloth, etc. to prevent flaw to the product.** 3) Remove the hooking claws by pushing minus screwdriver according to the arrow mark in the right figure, and remove the fan guard. **2. Attachment** 1) Insert claws of the fan guard in the holes of the front cabinet. Push the hooking claws (9 positions) by hands and fix the claws. **All the attaching works have completed. Check that all the hooking claws are fixed to the specified positions.**	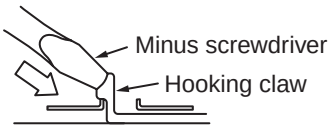

No.	Part name	Procedure	Remarks
⑪	TE sensor (outdoor heat exchanging temperature sensor) • **Attachment** With the leads pointing downward and the sensor leads pointing in the direction shown in the figure, install the sensor onto the straight pipe part of the condenser output pipe. 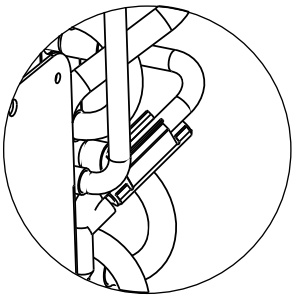 Detail C		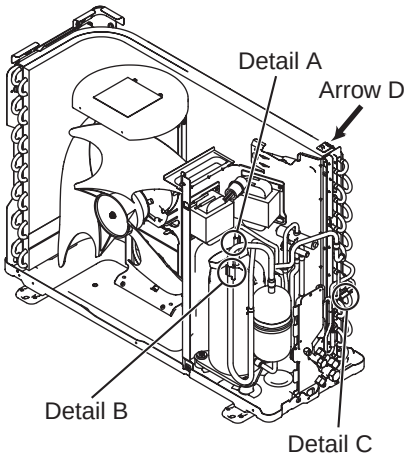
⑫	TS sensor (Suction pipe temperature sensor) • **Attachment** With its leads pointing downward, point the sensor in the direction of the packed valve, and install it onto the straight pipe part of the suction pipe.		
⑬	TD sensor (Discharge pipe temperature sensor) • **Attachment** With its leads pointed downward, install the sensor onto the vertical straight pipe part of the discharge pipe.		
⑭	TO sensor (Outside air temperature sensor) • **Attachment** Insert the outdoor air temperature sensor into the holder, and install the holder onto the heat exchanger.		

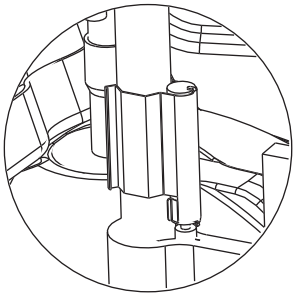

Detail B
TS sensor

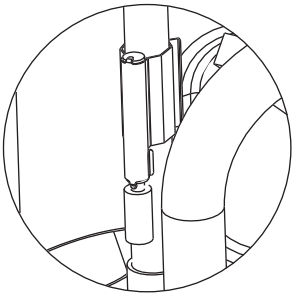

Detail A
TD sensor

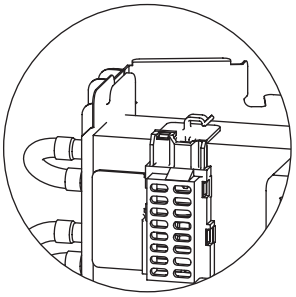

Arrow D
TO sensor

CAUTION

During the installation work (and on its completion), take care not to damage the coverings of the sensor leads on the edges of the metal plates or other parts. It is dangerous for these coverings to be damaged since damage may cause electric shocks and/or a fire.

CAUTION

After replacing the parts, check whether the positions where the sensors were installed are the proper positions as instructed. The product will not be controlled properly and trouble will result if the sensors have not been installed in their proper positions.

No.	Part name	Procedure	Remarks
⑮	Replacement of temperature sensor for servicing only Common service parts of sensor TO, TS, TE, TD	1) Cut the sensor 100 mm longer than old one. 2) Cut the protective tube after pulling out it (200 mm). 3) Move the protective tube toward the thermal sensor side and tear the tip of lead wire in two then strip the covering part. 4) Pass the stripped part through the thermal constringent tube. 5) Cut the old sensor 100 mm length on the connector side, and recycle that connector. 6) Tear the lead wire in two on the connector side and strip the covering part. 7) Twist the leads on the connector and sensor sides, and solder them. 8) Move the thermal constringent tubes toward the soldered parts and heat them with the dryer and constring them. 9) Wind the attached color tape round the both terminals of the protective tube when colored protective tube is used. 10) Fix the sensor again.	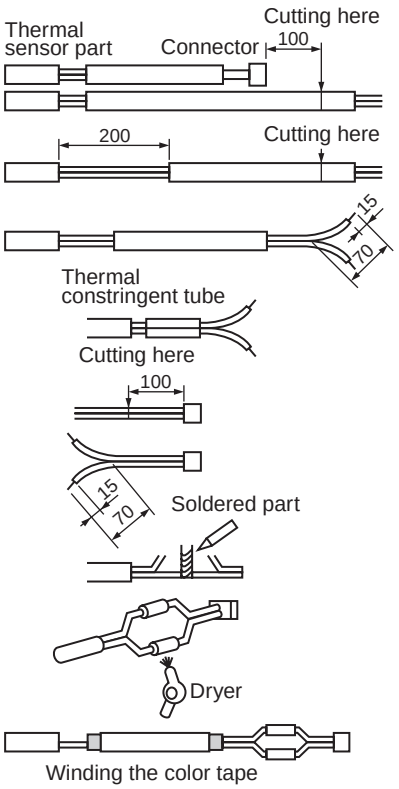

NOTE

1) Store the joint part of the sensor and the connector in the electric parts box.
2) Never joint them near the thermal sensor part.
   Otherwise it would cause insulation inferiority because of dew drops.
3) When replacing the sensor using the colored protective tube, wind the color tape matching the color of that tube.

These are parts for servicing sensors.

Please check that the accessories shown in the right table are packed.

	Parts name	Q'ty	Remarks
1	Sensor	1	Length : 3m
2	Sensor Spring (A)	1	For spare
3	Sensor Spring (B)	1	For spare
4	Thermal constringent tube	3	Including one spare
5	Color tape	1	9 colors
6	Terminal	3	

⑯	Cord heater assembly (-ND model only)	1) Perform the procedures in ⑦ above. (Do not perform the procedure in ⑦-6).) 2) Remove the cord clamp. (ST1Tø4 x 10L 1 pc.) 3) Remove the cord clamps (12 locations) fixing the cord heater assembly to the base plate. 4) Attach the new cord heater assembly to the base plate using the cord clamps supplied with the cord heater assembly. (Service code: 37557729)	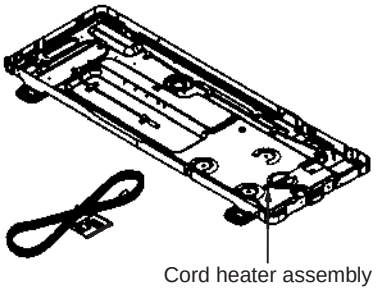

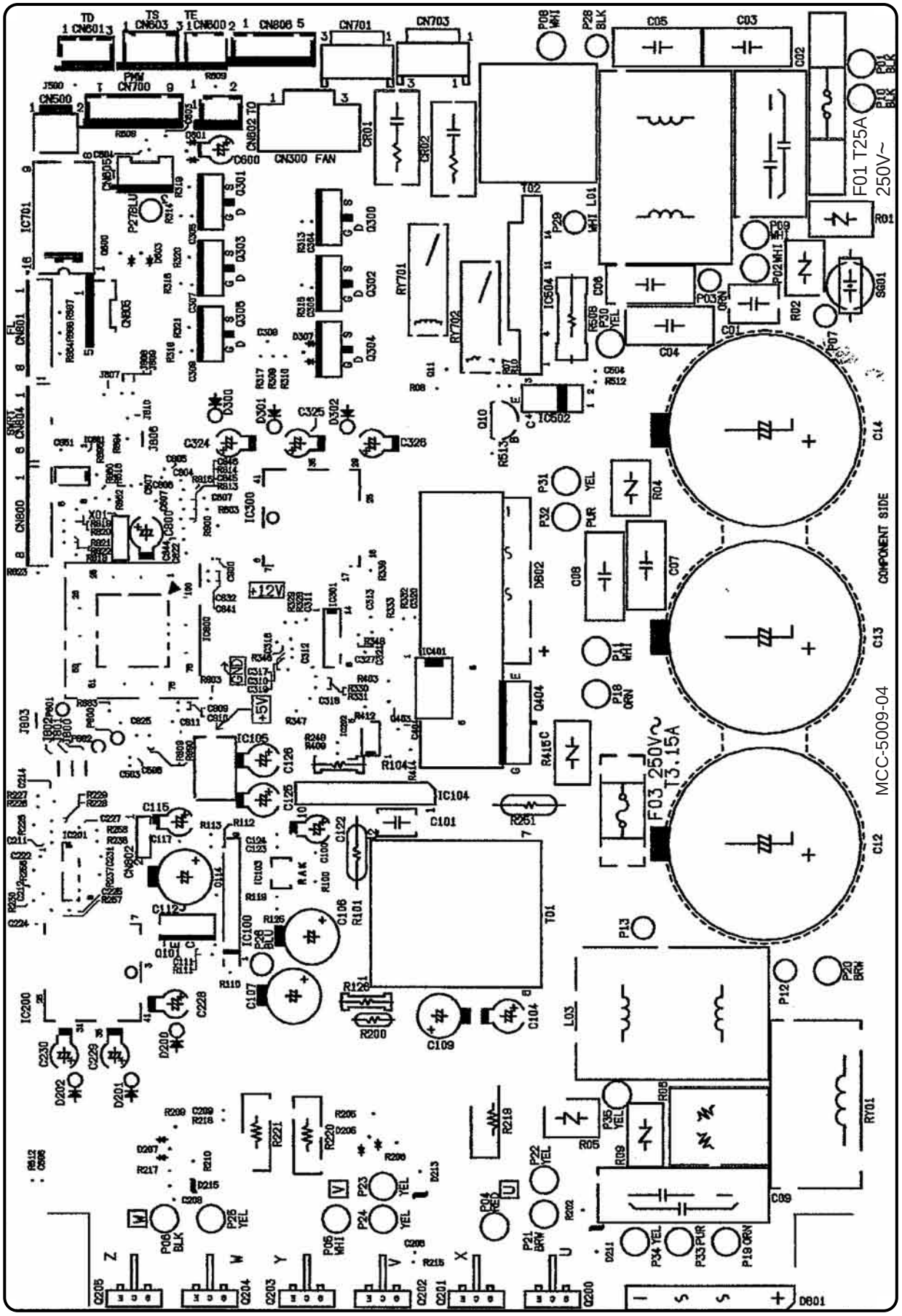
F01 T25A
250V~
F03 250V~
T3.15A
MCC-5009-04
COMPONENT SIDE

13. EXPLODED VIEWS AND PARTS LIST

13-1. Indoor Unit

RAS-B10SKVP-E, RAS-B13SKVP-E, RAS-B16SKVP-E

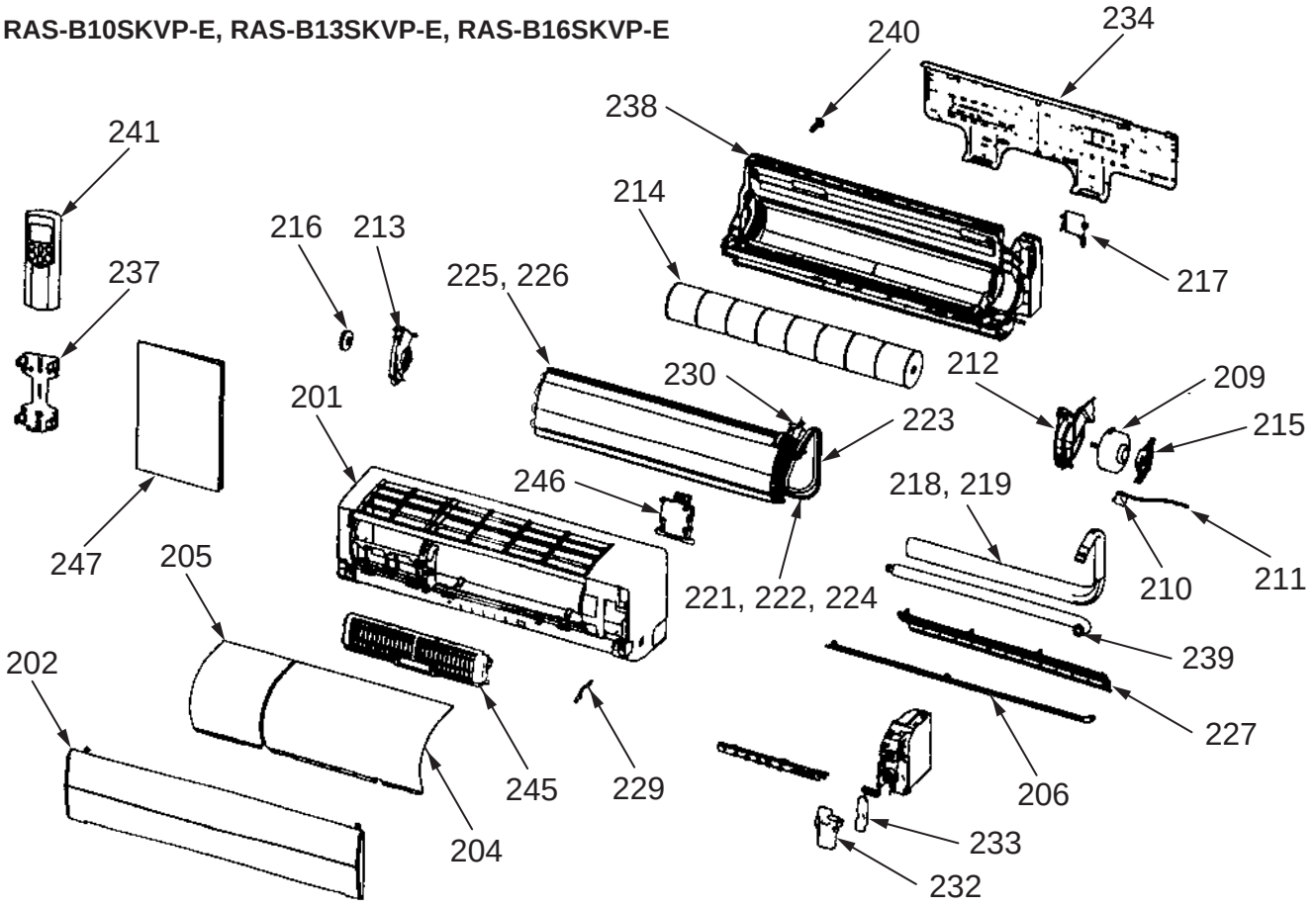

∗ The parts in the following parts list are conformed to RoHS.
Therefore be sure to use the following parts for repairing and replacing.

Location No.	Part No.	Description
201	43005709	Panel Ass'y, Front
202	43009694	Grille, Air Inlet
204	43080512	Filter, Air, Right
205	43080521	Filter, Air, Left
206	43009693	Louver, Horizontal
209	4302C067	Motor, Fan, DC
210	4302D003	Motor, Louver
211	4306A024	Cord, Motor, Louver
212	43039363	Band, Motor, Left
213	43039321	Base, Bearing
214	43020346	Fan, Cross Flow
215	43039314	Band, Motor
216	43020253	Bearing
217	4301V028	Holder, Pipe
218	43049701	Pipe, Shield (B16SKVP-E)
219	43049698	Pipe, Shield (B10SKVP-E, B13SKVP-E)
221	43047671	Pipe Ass'y, Connecting, Gas (B10SKVP-E, B13SKVP-E)
222	43047672	Pipe Ass'y, Connecting, Gas (B16SKVP-E)

Location No.	Part No.	Description
223	43049674	Spring (B16SKVP-E)
224	43047673	Pipe Ass'y, Connecting, Liquid
225	43044821	Evaporator Ass'y (B10SKVP-E, B13SKVP-E)
226	43044822	Evaporator Ass'y (B16SKVP-E)
227	43039324	Guide, Drain
229	43019904	Holder, Sensor
230	43049770	Holder, Evaporator, Right
232	43062256	Cover, Terminal
233	43062247	Cover, Lead
234	43082293	Plate, Installation
237	43083071	Holder, Remote Controller
238	43003311	Body Ass'y, Back
239	43070188	Hose, Drain
240	43079268	Cap, Drain
241	43066014	Remote Controller, WH-H04JE
245	43080528	Plasma Pure Filter
246	43080563	Generator Ass'y, HV
247	4308N971	Owner's Manual

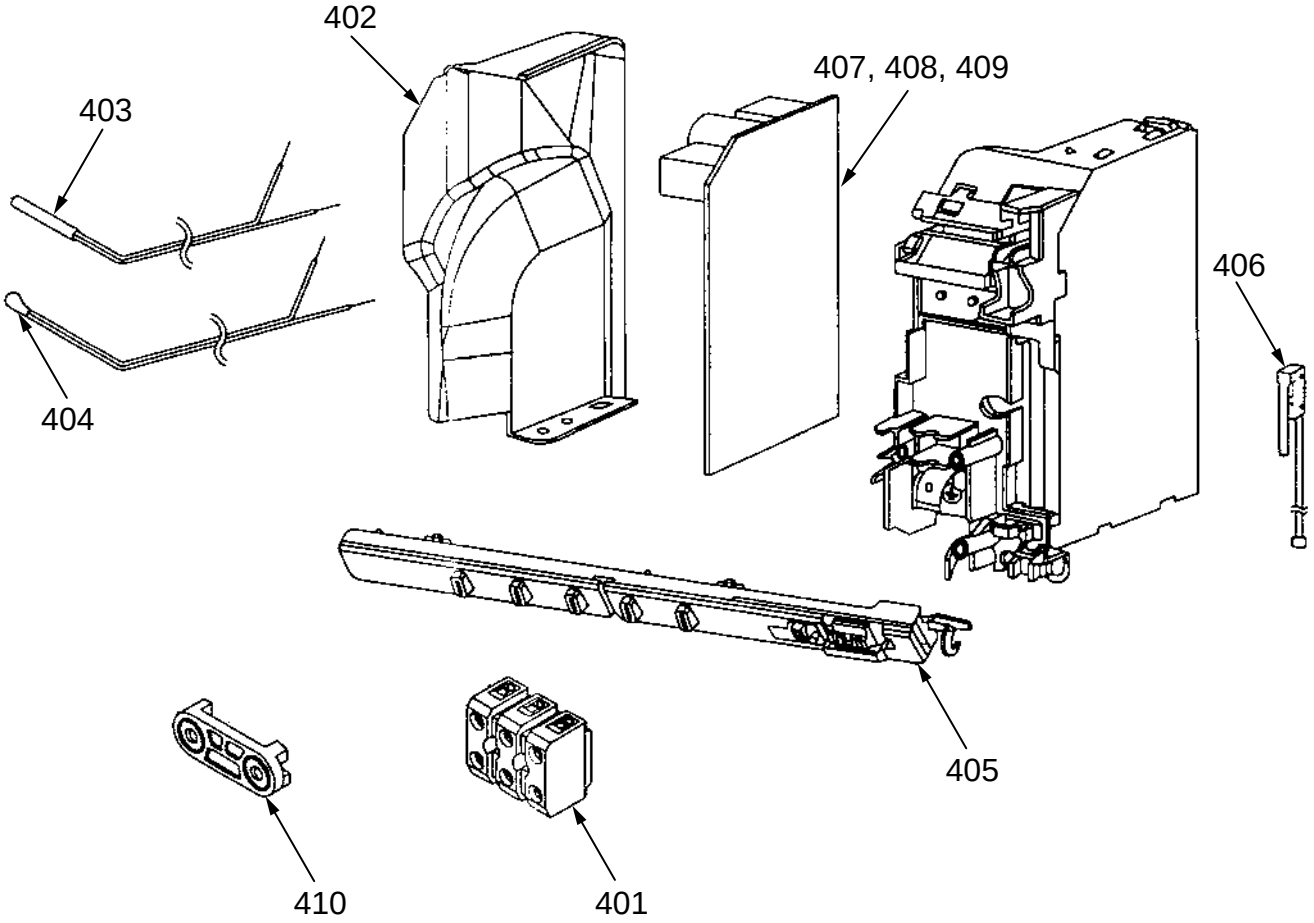

∗ The parts in the following parts list are conformed to RoHS.
Therefore be sure to use the following parts for repairing and replacing.

Location No.	Part No.	Description
401	4306A132	Terminal Block, 3P
402	43062263	Cover, E-Parts
403	43050425	Sensor, TC (Ø6), TCJ (Ø6)
404	43050426	Sensor, TA
405	4306S936	P.C. Board Ass'y, WRS-LED
406	43051350	Switch Ass'y, Micro

Location No.	Part No.	Description
407	4306S937	P.C. Board Ass'y (B10SKVP-E)
408	4306S938	P.C. Board Ass'y (B13SKVP-E)
409	4306S939	P.C. Board Ass'y (B16SKVP-E)
410	43067115	Clamp, Cord

RAS-10SKVP-ND, RAS-13SKVP-ND, RAS-16SKVP-ND

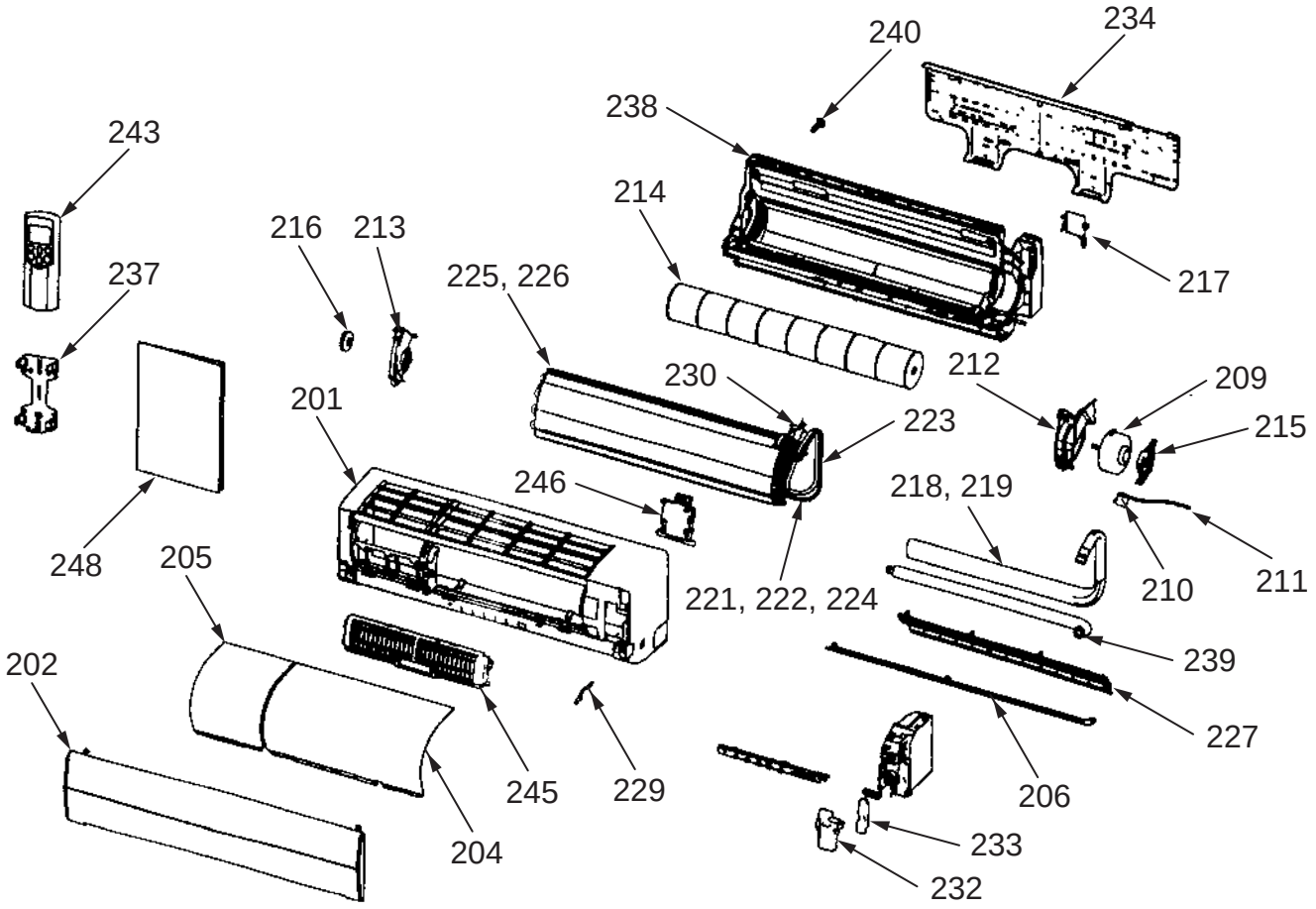

∗ The parts in the following parts list are conformed to RoHS.
Therefore be sure to use the following parts for repairing and replacing.

Location No.	Part No.	Description
201	43005709	Panel Ass'y, Front
202	43009694	Grille, Air Inlet
204	43080512	Filter, Air, Right
205	43080521	Filter, Air, Left
206	43009693	Louver, Horizontal
209	4302C067	Motor, Fan, DC
210	4302D003	Motor, Louver
211	4306A024	Cord, Motor, Louver
212	43039363	Band, Motor, Left
213	43039321	Base, Bearing
214	43020346	Fan, Cross Flow
215	43039314	Band, Motor
216	43020253	Bearing
217	4301V028	Holder, Pipe
218	43049701	Pipe, Shield (16SKVP-ND)
219	43049698	Pipe, Shield (10SKVP-ND, 13SKVP-ND)
221	43047671	Pipe Ass'y, Connecting, Gas (10SKVP-ND, 13SKVP-ND)
222	43047672	Pipe Ass'y, Connecting, Gas (16SKVP-ND)

Location No.	Part No.	Description
223	43049674	Spring (16SKVP-ND)
224	43047673	Pipe Ass'y, Connecting, Liquid
225	43044821	Evaporator Ass'y (10SKVP-ND, 13SKVP-ND)
226	43044822	Evaporator Ass'y (16SKVP-ND)
227	43039324	Guide, Drain
229	43019904	Holder, Sensor
230	43049770	Holder, Evaporator, Right
232	43062256	Cover, Terminal
233	43062247	Cover, Lead
234	43082293	Plate, Installation
237	43083071	Holder, Remote Controller
238	43003311	Body Ass'y, Back
239	43070188	Hose, Drain
240	43079268	Cap, Drain
243	43066016	Remote Controller, WH-H05JE
245	43080528	Plasma Pure Filter
246	43080563	Generator Ass'y, HV
248	4308N972	Owner's Manual

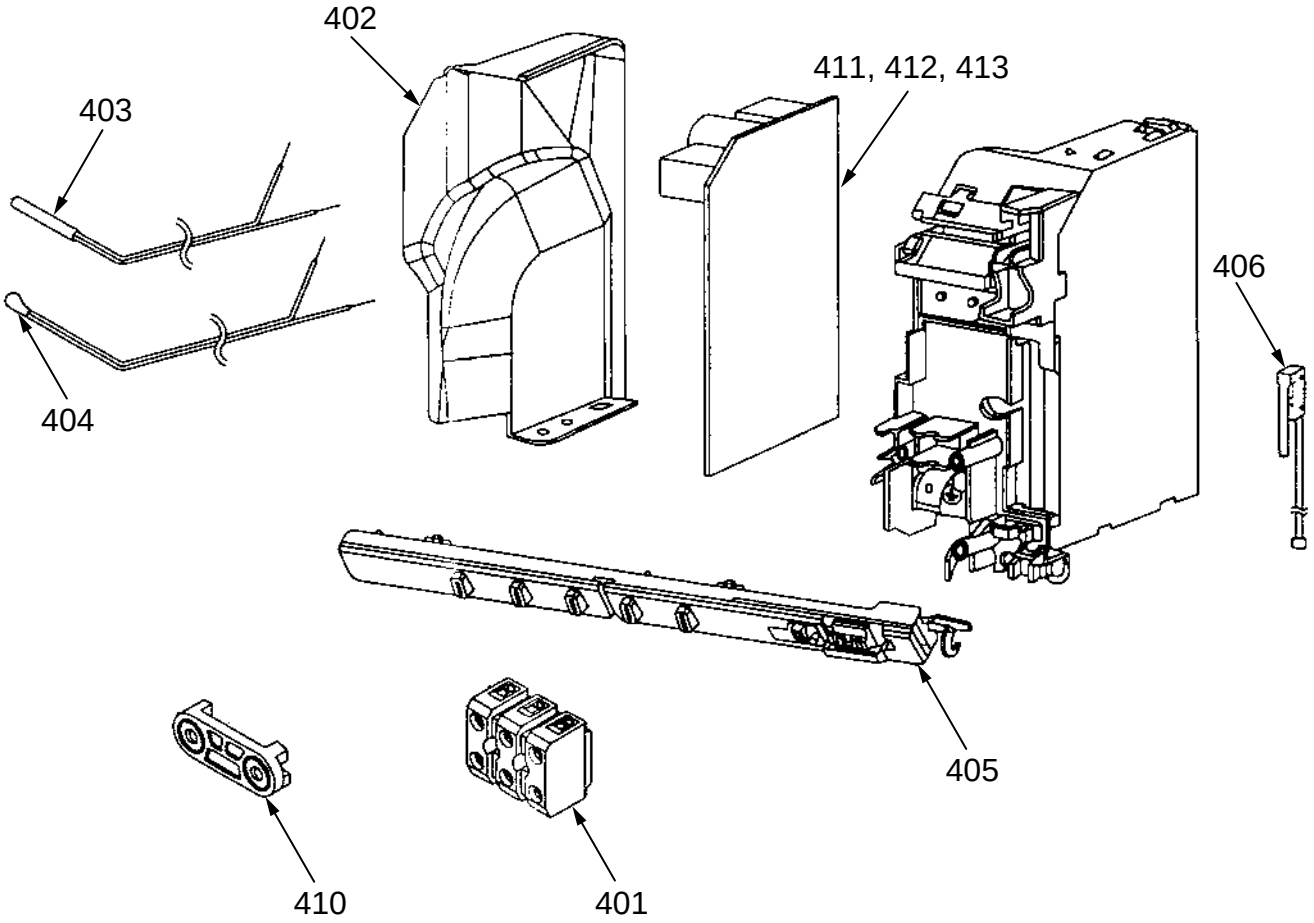

∗ The parts in the following parts list are conformed to RoHS.
Therefore be sure to use the following parts for repairing and replacing.

Location No.	Part No.	Description
401	4306A132	Terminal Block, 3P
402	43062263	Cover, E-Parts
403	43050425	Sensor, TC (Ø6), TCJ (Ø6)
404	43050426	Sensor, TA
405	4306S936	P.C. Board Ass'y, WRS-LED
406	43051350	Switch Ass'y, Micro

Location No.	Part No.	Description
410	43067115	Clamp, Cord
411	4306S949	P.C. Board Ass'y (10SKVP-ND)
412	4306S950	P.C. Board Ass'y (13SKVP-ND)
413	4306S951	P.C. Board Ass'y (16SKVP-ND)

13-2. Outdoor Unit

RAS-10SAVP-E, RAS-13SAVP-E, RAS-16SAVP-E

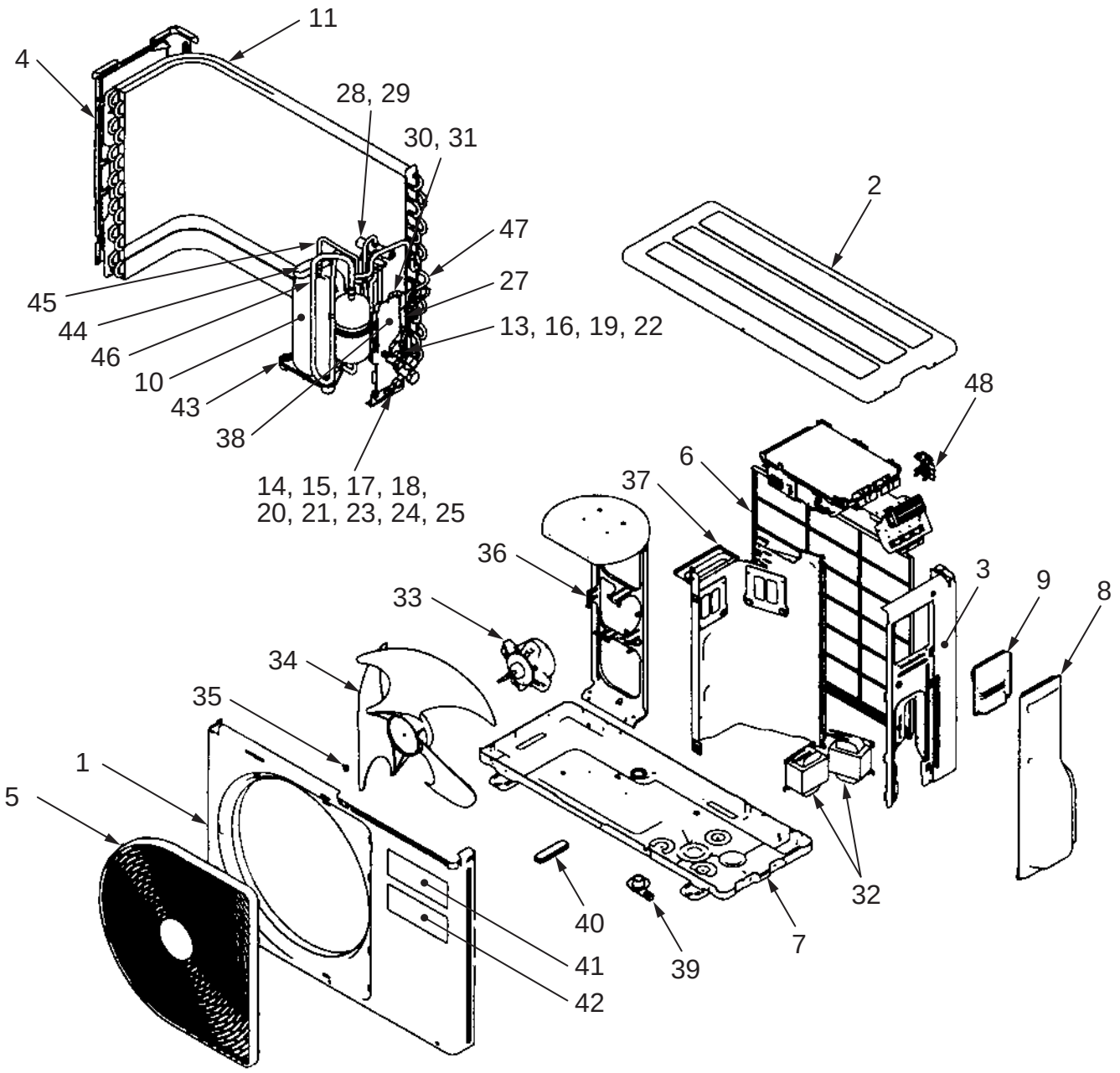

∗ The parts in the following parts list are conformed to RoHS.
Therefore be sure to use the following parts for repairing and replacing.

Location No.	Part No.	Description
1	43005657	Cabinet, Front
2	43005642	Cabinet, Upper
3	43005658	Cabinet, Side, Right
4	43005634	Cabinet, Side, Left
5	4301V035	Guard, Fan
6	4301V053	Guard, Fin
7	43100346	Base Ass'y, RoHS
8	43119471	Cover, Valve, Packed
9	43062262	Cover, Wiring Ass'y
10	43041641	Compressor, DA111A1F-24F
11	43043780	Condenser Ass'y
13	37546845	Valve, Packed, 6.35
14	43046442	Valve, Packed, 9.52 (10SAVP-E, 13SAVP-E)
15	43146680	Valve, Packed, 12.7 (16SAVP-E)
16	43147196	Bonnet, 1/4 IN
17	43047401	Bonnet, 3/8 IN (10SAVP-E, 13SAVP-E)
18	43147195	Bonnet, 1/2 IN (16SAVP-E)
19	43047676	Nut, Flare, 6.35
20	43047677	Nut, Flare, 9.52 (10SAVP-E, 13SAVP-E)
21	43047655	Nut, Flare, 12.7 (16SAVP-E)
22	43047679	Cap, Valve, Packed, 6.35
23	43047680	Cap, Valve, Packed, 9.52 (10SAVP-E, 13SAVP-E)

Location No.	Part No.	Description
24	43047659	Cap, Valve, Packed, 12.7 (16SAVP-E)
25	43047674	Cap, Charge, Port
27	44246239	Tube, Capillary, I.D 1.2
28	43046444	Valve, 4-Way, STF-0108Z
29	43046443	Coil, Solenoid, VHV-01AJ503C1
30	37546848	Valve, Pulse, Modulation, CAM-B22YGTF-3
31	43046450	Coil, PMV, CAM-MD12TF-9
32	43058270	Reactor
33	4302C068	Motor, Fan, ICF-140-43-4R
34	43020329	Fan, Propeller, PJ421
35	43047669	Nut, Flange
36	43039394	Base, Motor
37	43004242	Plate, Partition
38	4301V072	Plate, Fix, Valve, Packed
39	43032441	Nipple, Drain
40	43089160	Cap, Waterproof
41	4301P703	Mark, TOSHIBA
42	4301P702	Mark, DAISEIKAI
43	43042485	Rubber, Cushion
44	43062176	Sleeve, Flag
45	43063321	Holder, Sensor (TD)
46	43063322	Holder, Sensor (TS)
47	43063325	Holder, Sensor (TE)
48	43063339	Holder, Sensor (TO)

RAS-10SAVP-ND, RAS-13SAVP-ND, RAS-16SAVP-ND

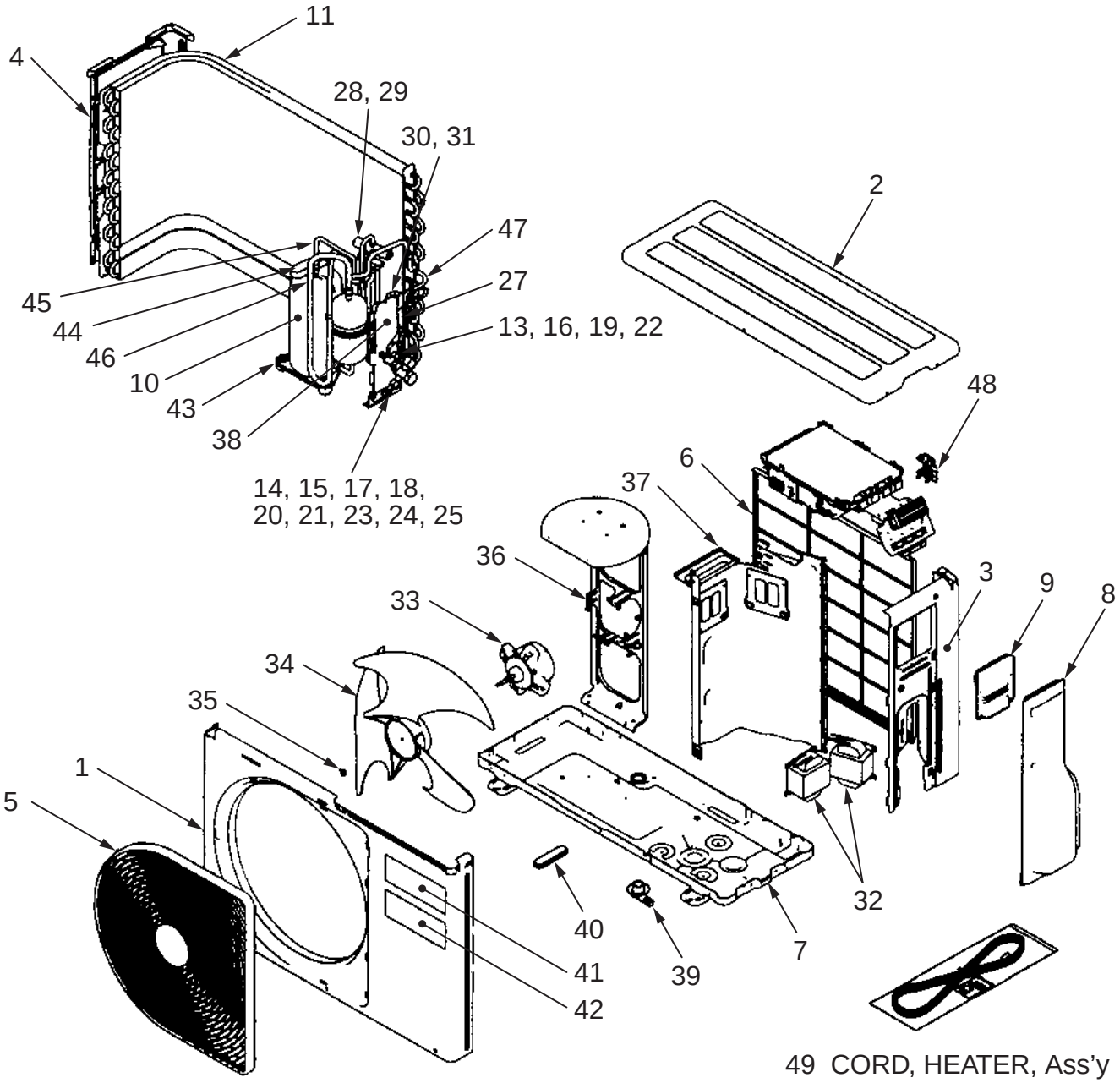

∗ The parts in the following parts list are conformed to RoHS.
Therefore be sure to use the following parts for repairing and replacing.

Location No.	Part No.	Description
1	43005657	Cabinet, Front
2	43005642	Cabinet, Upper
3	43005658	Cabinet, Side, Right
4	43005634	Cabinet, Side, Left
5	4301V035	Guard, Fan
6	4301V053	Guard, Fin
7	43005716	Base Ass'y
8	43119471	Cover, Valve, Packed
9	43062262	Cover, Wiring Ass'y
10	43041641	Compressor, DA111A1F-24F
11	43043780	Condenser Ass'y
13	37546845	Valve, Packed, 6.35
14	43046442	Valve, Packed, 9.52 (10SAVP-ND, 13SAVP-ND)
15	43146680	Valve, Packed, 12.7 (16SAVP-ND)
16	43147196	Bonnet, 1/4 IN
17	43047401	Bonnet, 3/8 IN (10SAVP-ND, 13SAVP-ND)
18	43147195	Bonnet, 1/2 IN (16SAVP-ND)
19	43047676	Nut, Flare, 6.35
20	43047677	Nut, Flare, 9.52 (10SAVP-ND, 13SAVP-ND)
21	43047655	Nut, Flare, 12.7 (16SAVP-ND)
22	43047679	Cap, Valve, Packed, 6.35
23	43047680	Cap, Valve, Packed, 9.52 (10SAVP-ND, 13SAVP-ND)

Location No.	Part No.	Description
24	43047659	Cap, Valve, Packed, 12.7 (16SAVP-ND)
25	43047674	Cap, Charge, Port (10SAVP-ND, 13SAVP-ND)
27	44246239	Tube, Capillary, I.D 1.2
28	43046444	Valve, 4-Way, STF-0108Z
29	43046443	Coil, Solenoid, VHV-01AJ503C1
30	37546848	Valve, Pulse, Modulation, CAM-B22YGTF-3
31	43046450	Coil, PMV, CAM-MD12TF-9
32	43058270	Reactor
33	4302C068	Motor, Fan, ICF-140-43-4R
34	43020329	Fan, Propeller, PJ421
35	43047669	Nut, Flange
36	43039394	Base, Motor
37	43004242	Plate, Partition
38	4301V072	Plate, Fix, Valve, Packed
39	43032441	Nipple, Drain
40	43089160	Cap, Waterproof
41	4301P703	Mark, TOSHIBA
42	4301P702	Mark, DAISEIKAI
43	43042485	Rubber, Cushion
44	43062176	Sleeve, Flag
45	43063321	Holder, Sensor (TD)
46	43063322	Holder, Sensor (TS)
47	43063325	Holder, Sensor (TE)
48	43063339	Holder, Sensor (TO)
49	37557729	Cord, Heater A'ssy

13-3. P.C. Board Layout

RAS-10SAVP-E-INV, RAS-13SAVP-E-INV, RAS-16SAVP-E-INV

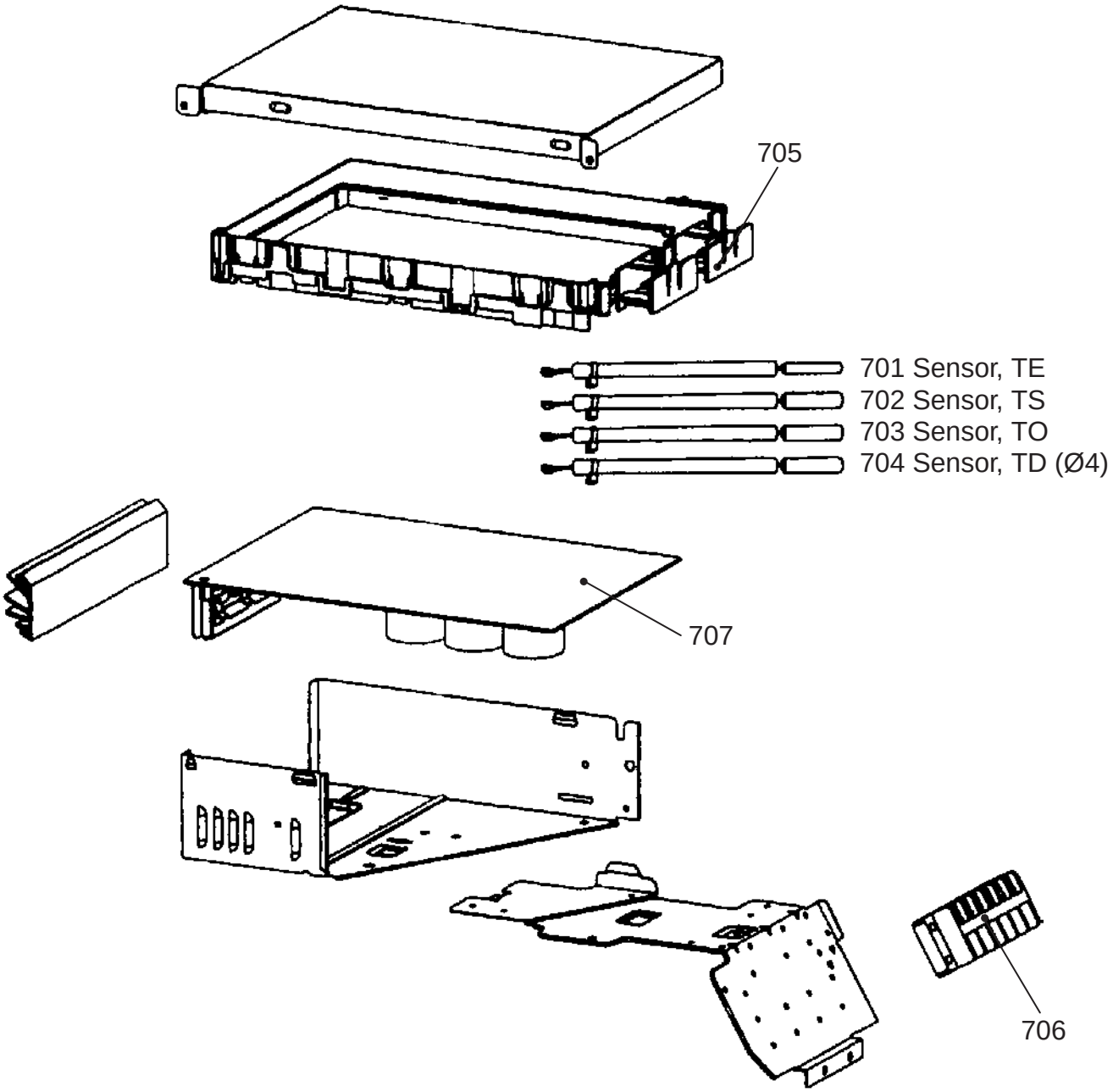

∗ The parts in the following parts list are conformed to RoHS.
Therefore be sure to use the following parts for repairing and replacing.

Location No.	Part No.	Description
701	43050422	Sensor, TE
702	43050423	Sensor, TS
703	43050427	Sensor, TO
704	43050430	Sensor, TD

Location No.	Part No.	Description
705	43062228	Base, P.C. board
706	43160566	Terminal Block, 6P, 20A
707	4306S914	P.C. board Ass'y, MCC5009

RAS-10SAVP-ND-INV, RAS-13SAVP-ND-INV, RAS-16SAVP-ND-INV

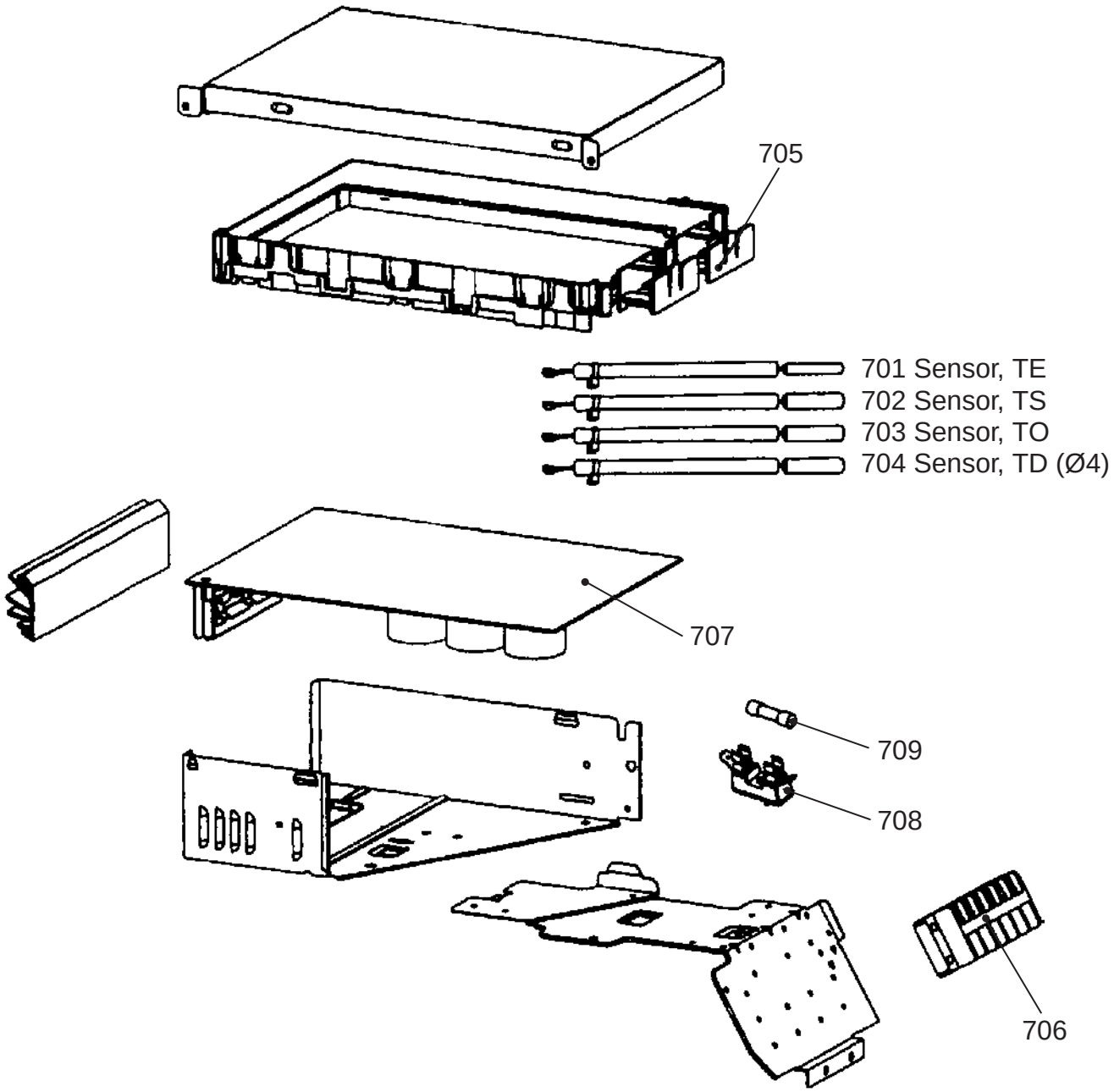

∗ The parts in the following parts list are conformed to RoHS.
Therefore be sure to use the following parts for repairing and replacing.

Location No.	Part No.	Description
701	43050422	Sensor, TE
702	43050423	Sensor, TS
703	43050427	Sensor, TO
704	43050430	Sensor, TD
705	43062228	Base, P.C. board

Location No.	Part No.	Description
706	43160566	Terminal Block, 6P
707	4306S914	P.C. board Ass'y, MCC5009
708	43160571	Fuse, Holder, 15A, 250V
709	4306A156	Fuse (ET), 3.15A, AC250V

14. SET UP OF SERVICE P.C. BOARD

Before replacing the P.C. board, set up the P.C. board according to the following table.

Caution **When repaired P.C. board should be electric discharge of capacitor. (C12, C13, C14)**

APPLICATION MODELS :

RAS-10SAVP-E, RAS-13SAVP-E, RAS-16SAVP-E
RAS-10SAVP-ND, RAS-13SAVP-ND, RAS-16SAVP-ND

JUMPER SET UP :

As shown in the following table, cut jumper lead wire (J800, J801, J802, J806) according to each model.

Corresponding model	ORIGINAL	RAS-10SAVP-E	RAS-13SAVP-E	RAS-16SAVP-E	RAS-10SAVP-ND	RAS-13SAVP-ND	RAS-16SAVP-ND
Jumper lead wire J800	Close (Original)	Close (Original)	Close (Original)	Open (Cut)	Open (Cut)	Close (Original)	Close (Original)
Jumper lead wire J801	Close (Original)	Close (Original)	Open (Cut)	Close (Original)	Open (Cut)	Close (Original)	Open (Cut)
Jumper lead wire J802	Close (Original)	Close (Original)	Close (Original)	Close (Original)	Close (Original)	Open (Cut)	Close (Original)
Jumper lead wire J806	Close (Original)	Close (Original)	Close (Original)	Close (Original)	Close (Original)	Close (Original)	Close (Original)

LOCATION OF JUMPER LEAD WIRE :

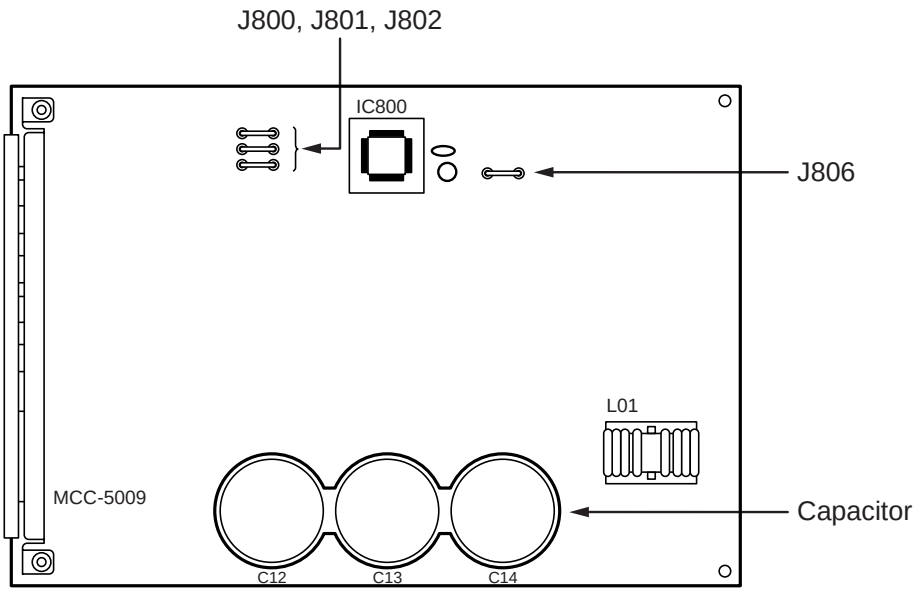

TOSHIBA CARRIER CORPORATION
2 CHOME 12-32, KONAN, MINATOKU, TOKYO, 108-0075, JAPAN
Copyright © 1999 to 2007 TOSHIBA CARRIER CORPORATION, ALL Rights Reserved.