TECHNICAL & SERVICE MANUAL

SANYO

FILE NO.

SAP-KRV93EH + SAP-CRV93EH
SAP-KRV123EH + SAP-CRV123EH

Destination: Europe

DC INVERTER SPLIT SYSTEM AIR CONDITIONER

Indoor Model No.	Product Code No.
SAP-KRV93EH	1 852 089 81
SAP-KRV123EH	1 852 089 80

Outdoor Model No.	Product Code No.
SAP-CRV93EH	1 852 089 85
SAP-CRV123EH	1 852 089 84

Indoor Unit

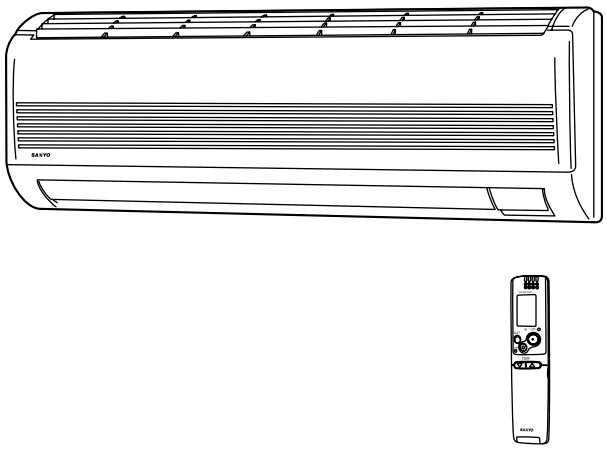

SAP-KRV93EH
SAP-KRV123EH

Outdoor Unit

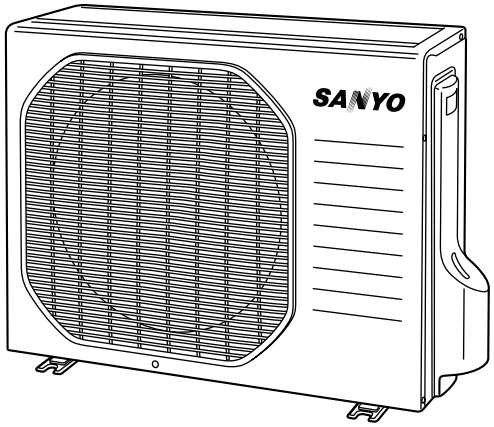

SAP-CRV93EH
SAP-CRV123EH

IMPORTANT

These air conditioners employ new refrigerant R410A.

Pay special attention when servicing the unit.

R410A

REFERENCE NO. SM700590

W

IMPORTANT!
Please Read Before Starting

This air conditioning system meets strict safety and operating standards. As the installer or service person, it is an important part of your job to install or service the system so it operates safely and efficiently.

For safe installation and trouble-free operation, you must:

- Carefully read this instruction booklet before beginning.
- Follow each installation or repair step exactly as shown.
- Observe all local, state, and national electrical codes.
- Pay close attention to all warning and caution notices given in this manual.

WARNING

This symbol refers to a hazard or unsafe practice which can result in severe personal injury or death.

CAUTION

This symbol refers to a hazard or unsafe practice which can result in personal injury or product or property damage.

If Necessary, Get Help

These instructions are all you need for most installation sites and maintenance conditions. If you require help for a special problem, contact our sales/service outlet or your certified dealer for additional instructions.

In Case of Improper Installation

The manufacturer shall in no way be responsible for improper installation or maintenance service, including failure to follow the instructions in this document.

SPECIAL PRECAUTIONS

WARNING

When Wiring

ELECTRICAL SHOCK CAN CAUSE SEVERE PERSONAL INJURY OR DEATH. ONLY A QUALIFIED, EXPERIENCED ELECTRICIAN SHOULD ATTEMPT TO WIRE THIS SYSTEM.

- Do not supply power to the unit until all wiring and tubing are completed or reconnected and checked.
- Highly dangerous electrical voltages are used in this system. Carefully refer to the wiring diagram and these instructions when wiring. Improper connections and inadequate grounding can cause accidental injury or death.
- Ground the unit following local electrical codes.
- Connect all wiring tightly. Loose wiring may cause overheating at connection points and a possible fire hazard.

When Transporting

Be careful when picking up and moving the indoor and outdoor units. Get a partner to help, and bend your knees when lifting to reduce strain on your back. Sharp edges or thin aluminum fins on the air conditioner can cut your fingers.

When Installing…

…In a Ceiling or Wall

Make sure the ceiling/wall is strong enough to hold the unit's weight. It may be necessary to construct a strong wood or metal frame to provide added support.

…In a Room

Properly insulate any tubing run inside a room to prevent "sweating" that can cause dripping and water damage to walls and floors.

…In Moist or Uneven Locations

Use a raised concrete pad or concrete blocks to provide a solid, level foundation for the outdoor unit. This prevents water damage and abnormal vibration.

…In an Area with High Winds

Securely anchor the outdoor unit down with bolts and a metal frame. Provide a suitable air baffle.

…In a Snowy Area (for Heat Pump-type Systems)

Install the outdoor unit on a raised platform that is higher than drifting snow. Provide snow vents.

When Connecting Refrigerant Tubing

- Use the flare method for connecting tubing.
- Apply refrigerant lubricant to the matching surfaces of the flare and union tubes before connecting them, then tighten the nut with a torque wrench for a leak-free connection.
- Check carefully for leaks before starting the test run.

When Servicing

- Turn the power OFF at the main power box (mains) before opening the unit to check or repair electrical parts and wiring.
- Keep your fingers and clothing away from any moving parts.
- Clean up the site after you finish, remembering to check that no metal scraps or bits of wiring have been left inside the unit being serviced.

Others

CAUTION

- Ventilate any enclosed areas when installing or testing the refrigeration system. Escaped refrigerant gas, on contact with fire or heat, can produce dangerously toxic gas.
- Confirm upon completing installation that no refrigerant gas is leaking. If escaped gas comes in contact with a stove, gas water heater, electric room heater or other heat source, it can produce dangerously toxic gas.

Table of Contents

Page

1. OPERATING RANGE 4

2. SPECIFICATIONS
- 2-1. Unit Specifications 5
- 2-2. Major Component Specifications 7
- 2-3. Other Component Specifications 11

3. DIMENSIONAL DATA 12

4. REFRIGERANT FLOW DIAGRAM
- 4-1. Refrigerant Flow Diagram 14

5. PERFORMANCE DATA
- 5-1. Temperature Charts 15
- 5-2. Air Throw Distance Charts 17
- 5-3. Operating Frequency Charts 19

6. ELECTRICAL DATA
- 6-1. Electrical Characteristics 23
- 6-2. Electric Wiring Diagrams 24

7. INSTALLATION INSTRUCTIONS
- 7-1. Installation Site Selection 26
- 7-2. Recommended Wire Length and Diameter 28
- 7-3. Remote Control Unit Installation Position 29
- 7-4. How to Test Run the Air Conditioner 30
- 7-5. Remove the Grille to Install the Indoor Unit 31

8. MAINTENANCE
- 8-1. Address Setting of the Remote Control Unit 32
- 8-2. Disconnecting and Connecting Positive Connector for Outdoor Unit 33

9. FUNCTIONS
- 9-1. Operation Functions 34
- 9-2. Protective Functions 36

10. TROUBLESHOOTING 38

11. CHECKING ELECTRICAL COMPONENTS
- 11-1. Measurement of Insulation Resistance 43
- 11-2. Checking Continuity of Fuse on PCB Ass'y 44

12. REFRIGERANT R410A:
SPECIAL PRECAUTIONS WHEN SERVICING UNIT 45

APPENDIX **INSTRUCTION MANUAL** 52

1. OPERATING RANGE

	Temperature	Indoor Air Intake Temp.	Outdoor Air Intake Temp.
Cooling	Maximum	32°C D.B. / 23°C W.B.	43°C D.B.
	Minimum	19°C D.B. / 14°C W.B.	19°C D.B.
Heating	Maximum	27°C D.B.	24°C D.B. / 18°C W.B.
	Minimum	16°C D.B.	–20°C D.B. / –20°C W.B.

2. SPECIFICATIONS

2-1. Unit Specifications

Indoor Unit **SAP-KRV93EH**
Outdoor Unit **SAP-CRV93EH**

Power Source			220 – 240V Single-phase 50Hz	
Voltage Rating			230V	
Performance			Cooling	Heating
	Capacity	kW	2.65 (0.9 – 3.2)	3.60 (0.9 – 5.0)
		BTU/h	9,000 (3,100 – 10,900)	12,300 (3,100 – 17,100)
	Air circulation (High)	m^3/h	480	530
	Moisture removal (High)	Liters/h	1.6	—
Electrical Rating			Cooling	Heating
	Available voltage range	V	198 – 264	
	Running amperes	A	3.86 (1.28 – 5.88)	4.81 (1.21 – 6.47)
	Power input	W	755 (250 – 1,150)	995 (250 – 1,340)
	Power factor	%	85	90
	C.O.P.	W/W	3.51	3.62
	Compressor locked rotor amperes	A	15	
Features				
	Controls / Temperature control		Microprocessor / I.C. thermister	
	Control unit		Wireless remote control unit	
	Timer		ON / OFF 24 hours & Daily program, 1-hour OFF	
	Fan speeds Indoor / Outdoor		3 and Auto / 1 (Hi)	
	Airflow direction (Indoor)	Horizontal	Manual	
		Vertical	Auto	
	Air filter		Washable, Anti-Mold	
	Compressor		Rotary (DC inverter)	
	Refrigerant / Amount charged at shipment	g	R410A / 950	
	Refrigerant control		Electric expansion valve	
	Operation sound Indoor: Hi / Me / Lo	dB-A	34 / 31 / 28	34 / 31 / 28
	Outdoor: Hi	dB-A	46	47
	Refrigerant tubing connections		Flare type	
	Max allowable tubing length at shipment	m	7.5	
	Refrigerant tube diameter Narrow tube	mm (in.)	6.35 (1/4)	
	Wide tube	mm (in.)	9.52 (3/8)	
	Refrigerant tube kit / Accessories		Optional / Air clean filter	
Dimensions & Weight			Indoor Unit	Outdoor Unit
	Unit dimensions Height	mm	285	548
	Width	mm	825	720
	Depth	mm	189	265
	Package dimensions Height	mm	350	600
	Width	mm	900	856
	Depth	mm	255	362
	Weight Net	kg	9.0	34.0
	Shipping	kg	11.0	36.0
	Shipping volume	m^3	0.080	0.186

DATA SUBJECT TO CHANGE WITHOUT NOTICE.

Remarks: Rating conditions are:
Cooling: Indoor air temperature 27°C D.B. / 19°C W.B.
Outdoor air temperature 35°C D.B. / 24°C W.B.
Heating: Indoor air temperature 20°C D.B.
Outdoor air temperature 7°C D.B. / 6°C W.B.

Indoor Unit **SAP-KRV123EH**
Outdoor Unit **SAP-CRV123EH**

Power Source			220 – 240V Single-phase 50Hz	
Voltage Rating			230V	
Performance			Cooling	Heating
Capacity		kW	3.50 (0.9 – 3.8)	4.20 (0.9 – 5.8)
		BTU/h	11,900 (3,100 – 13,000)	14,300 (3,100 – 19,800)
Air circulation (High)		m^3/h	500	530
Moisture removal (High)		Liters/h	2.0	—
Electrical Rating			Cooling	Heating
Available voltage range		V	198 – 264	
Running amperes		A	5.21 (1.19 – 6.21)	5.48 (1.18 – 7.09)
Power input		W	1,090 (250 – 1,300)	1,165 (250 – 1,500)
Power factor		%	91	92
C.O.P.		W/W	3.21	3.61
Compressor locked rotor amperes		A	15	
Features				
Controls / Temperature control			Microprocessor / I.C. thermostat	
Control unit			Wireless remote control unit	
Timer			ON / OFF 24 hours & Daily program, 1-hour OFF	
Fan speeds	Indoor / Outdoor		3 and Auto / 1 (Hi)	
Airflow direction (Indoor)		Horizontal	Manual	
		Vertical	Auto	
Air filter			Washable, Anti-Mold	
Compressor			Rotary (DC inverter)	
Refrigerant / Amount charged at shipment		g	R410A / 1,100	
Refrigerant control			Electric expansion valve	
Operation sound	Indoor: Hi / Me / Lo	dB-A	36 / 33 / 29	34 / 31 / 29
	Outdoor: Hi	dB-A	47	49
Refrigerant tubing connections			Flare type	
Max allowable tubing length at shipment		m	7.5	
Refrigerant tube diameter	Narrow tube	mm (in.)	6.35 (1/4)	
	Wide tube	mm (in.)	9.52 (3/8)	
Refrigerant tube kit / Accessories			Optional / Air clean filter	
Dimensions & Weight			Indoor Unit	Outdoor Unit
Unit dimensions	Height	mm	285	548
	Width	mm	825	720
	Depth	mm	189	265
Package dimensions	Height	mm	350	600
	Width	mm	900	856
	Depth	mm	255	362
Weight	Net	kg	9.0	35.0
	Shipping	kg	11.0	37.0
Shipping volume		m^3	0.080	0.186

DATA SUBJECT TO CHANGE WITHOUT NOTICE.

Remarks: Rating conditions are:

Cooling: Indoor air temperature 27°C D.B. / 19°C W.B.
Outdoor air temperature 35°C D.B. / 24°C W.B.

Heating: Indoor air temperature 20°C D.B.
Outdoor air temperature 7°C D.B. / 6°C W.B.

2-2. Major Component Specifications

2-2-1. Indoor Unit

Indoor Unit **SAP–KRV93EH**

Control PCB			
	Part No.		CB-KRV93EH (POW-KRV93GJH)
	Controls		Microprocessor
	Control circuit fuse		250V 3.15A

Remote Control Unit		RCS-3HVPSS4E

Fan & Fan Motor				
	Type Fan / Fan motor			Cross-flow / AC motor
	Q'ty … Dia. and length		mm	1 … D92 / L634
	Fan motor model … Q'ty			IBH-884-066 … 1
	No. of poles … Rough measure rpm (Cool / Heat)			4 … 1,200 / 1,250
	Nominal output		W	30
	Coil resistance (Ambient temp. 20°C)		Ω	BRN – WHT: 234 PNK (RED) – WHT: 209 — : —
	Safety devices	Type		Thermal fuse
		Operating temp. Open	°C	130
		Close		—
	Run capacitor		μF	1.2
			VAC	440

Flap Motor and Louver Motor			
	Type		Stepping motor
	Model		MP24Z3-12V
	Rating		DC 12V
	Coil resistance (Ambient temp. 25°C)	Ω	Each pair of terminals: 400 ± 7%

Heat Exchanger Coil			
	Coil		Aluminum plate fin / Copper tube
	Rows		2
	Fin pitch	mm	1.3
	Face area	m^2	0.188

DATA SUBJECT TO CHANGE WITHOUT NOTICE.

Indoor Unit **SAP–KRV123EH**

Control PCB		
	Part No.	CB-KRV123EH (POW-KRV93GJH)
	Controls	Microprocessor
	Control circuit fuse	250V 3.15A

Remote Control Unit	RCS-3HVPSS4E

Fan & Fan Motor			
	Type Fan / Fan motor		Cross-flow / AC motor
	Q'ty … Dia. and length	mm	1 … D92 / L634
	Fan motor model … Q'ty		IBH-884-066 … 1
	No. of poles … Rough measure rpm (Cool / Heat)		4 … 1,250 / 1,250
	Nominal output	W	30
	Coil resistance (Ambient temp. 20°C)	Ω	BRN – WHT: 234 PNK (RED) – WHT: 209 — : —
	Safety devices Type		Thermal fuse
	Operating temp. Open	°C	130
	Close		—
	Run capacitor	μF	1.2
		VAC	440

Flap Motor and Louver Motor		
	Type	Stepping motor
	Model	MP24Z3-12V
	Rating	DC 12V
	Coil resistance (Ambient temp. 25°C) Ω	Each pair of terminals: 400 ± 7%

Heat Exchanger Coil		
	Coil	Aluminum plate fin / Copper tube
	Rows	2
	Fin pitch mm	1.3
	Face area m^2	0.188

DATA SUBJECT TO CHANGE WITHOUT NOTICE.

2-2-2. Outdoor Unit

Outdoor Unit **SAP–CRV93EH**

Control PCB (A) / Control PCB (B)		
	Part No.	CB-CRV93EH (POW-CRV93GJH)
	Controls	Microprocessor
	Control circuit fuse	250V, 20A

Compressor		
	Type	DC Rotary (Hermetic)
	Compressor model / Nominal output	G4C090LU1ER / 600W
	Compressor oil … Amount cc	FV50S … 320
	Coil resistance (Ambient temp. 20°C) Ω	U – V: 0.81 V – W: 0.81 W – U: 0.81
	Safety devices	
	CT (Peak current cut-off control)	YES
	Compressor discharge temp. control	YES
	Operation cut-off control in abnormal ambient temp.	—
	Run capacitor μF	—
	VAC	—
	Crankcase heater	—

Fan & Fan Motor		
	Type … Fan / Fan motor	Propeller / AC motor
	Q'ty … Dia. mm	1 … 370
	Fan motor model … Q'ty	IB-976-501 … 1
	No. of poles … Rough measure rpm (Cool / Heat)	6 … 700 / 700
	Nominal output W	20
	Coil resistance (Ambient temp. 20°C) Ω	WHT – BRN: 213 RED (PNK) – WHT: 168 — : —
	Safety devices Type	Thermal fuse
	Operating temp. Open °C	150
	Close °C	—
	Run capacitor on control PCB (A) μF	2.0
	VAC	440

Heat Exchanger Coil		
	Coil	Aluminum plate fin / Copper tube
	Rows	2
	Fin pitch mm	1.4
	Face area m^2	0.288

External Finish	Acrylic baked-on enamel finish

DATA SUBJECT TO CHANGE WITHOUT NOTICE.

Outdoor Unit **SAP–CRV123EH**

Control PCB (A) / Control PCB (B)		
	Part No.	CB-CRV123EH (POW-CRV123GJH)
	Controls	Microprocessor
	Control circuit fuse	250V, 20A

Compressor		
	Type	DC Rotary (Hermetic)
	Compressor model / Nominal output	G4C090LU1ER / 600W
	Compressor oil … Amount cc	FV50S … 320
	Coil resistance (Ambient temp. 20°C) Ω	U – V: 0.81 V – W: 0.81 W – U: 0.81
	Safety devices	
	CT (Peak current cut-off control)	YES
	Compressor discharge temp. control	YES
	Operation cut-off control in abnormal ambient temp.	—
	Run capacitor μF	—
	VAC	—
	Crankcase heater	—

Fan & Fan Motor		
	Type … Fan / Fan Motor	Propeller / DC Motor
	Q'ty … Dia. mm	1 … 370
	Fan motor model … Q'ty	DAJ12-55J71-C … 1
	No. of poles … Rough measure rpm (Cool / Heat)	8 … 750 / 750
	Nominal output W	50
	Coil resistance (Ambient temp. 20°C) Ω	— — —
	Safety devices Type	—
	Operating temp. Open °C	—
	Close °C	—
	Run capacitor on control PCB (A) μF	—
	VAC	—

Heat Exchanger Coil		
	Coil	Aluminum plate fin / Copper tube
	Rows	2
	Fin pitch mm	1.4
	Face area m^2	0.367

External Finish	Acrylic baked-on enamel finish

DATA SUBJECT TO CHANGE WITHOUT NOTICE.

2-3. Other Component Specifications

Indoor Unit **SAP–KRV93EH**
SAP–KRV123EH
Outdoor Unit **SAP–CRV93EH**
SAP–CRV123EH

• Indoor air temp sensor

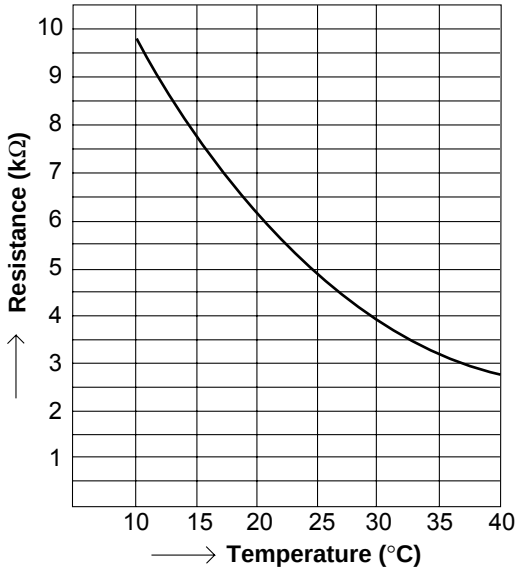

• Indoor heat exchanger sensor
• Compressor temp sensor

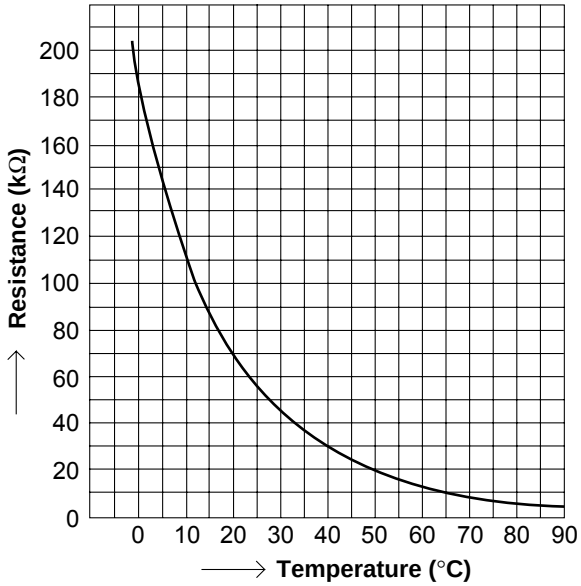

• Outdoor air temp sensor
• Outdoor heat exchanger sensor

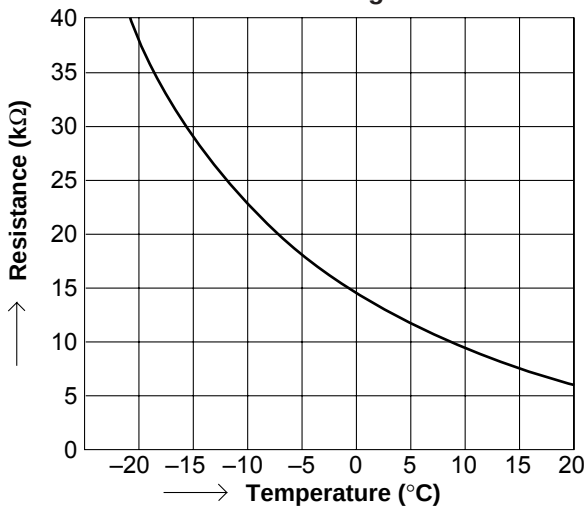

3. DIMENSIONAL DATA

Indoor Unit **SAP-KRV93EH**
SAP-KRV123EH

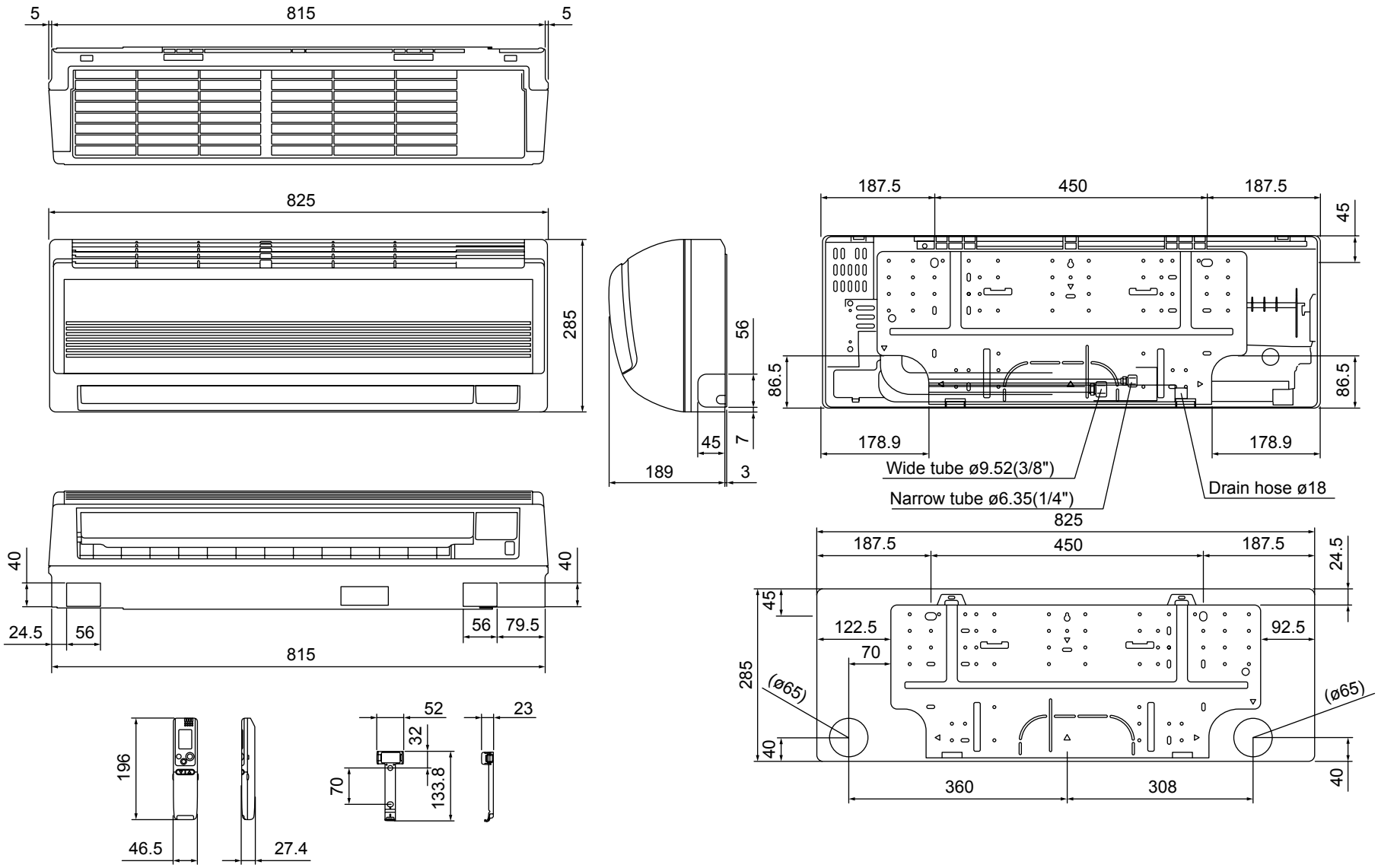

Unit: mm

Outdoor Unit **SAP-CRV93EH**
SAP-CRV123EH

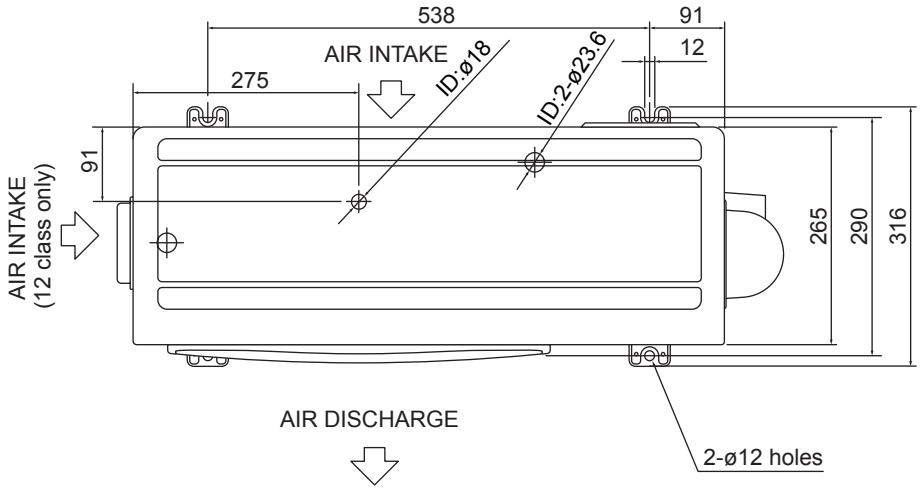

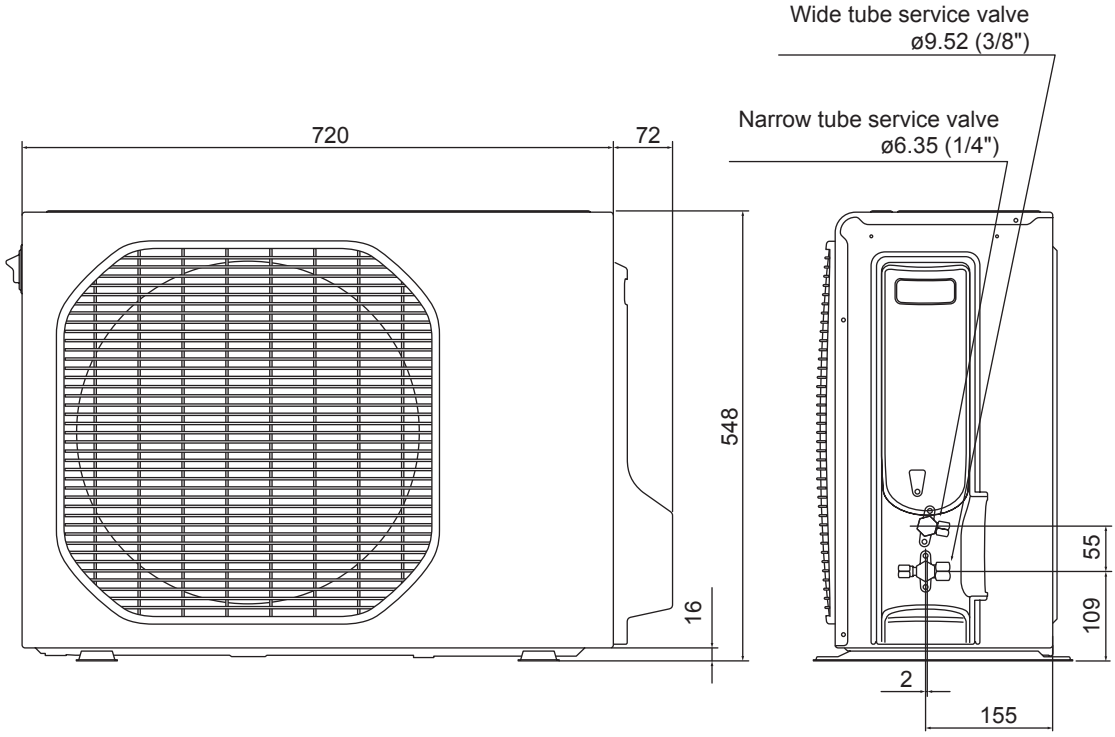

Unit: mm

4. REFRIGERANT FLOW DIAGRAM

4-1. Refrigerant Flow Diagram

Indoor Unit **SAP-KRV93EH**
SAP-CRV123EH

Outdoor Unit **SAP-CRV93EH**
SAP-CRV123EH

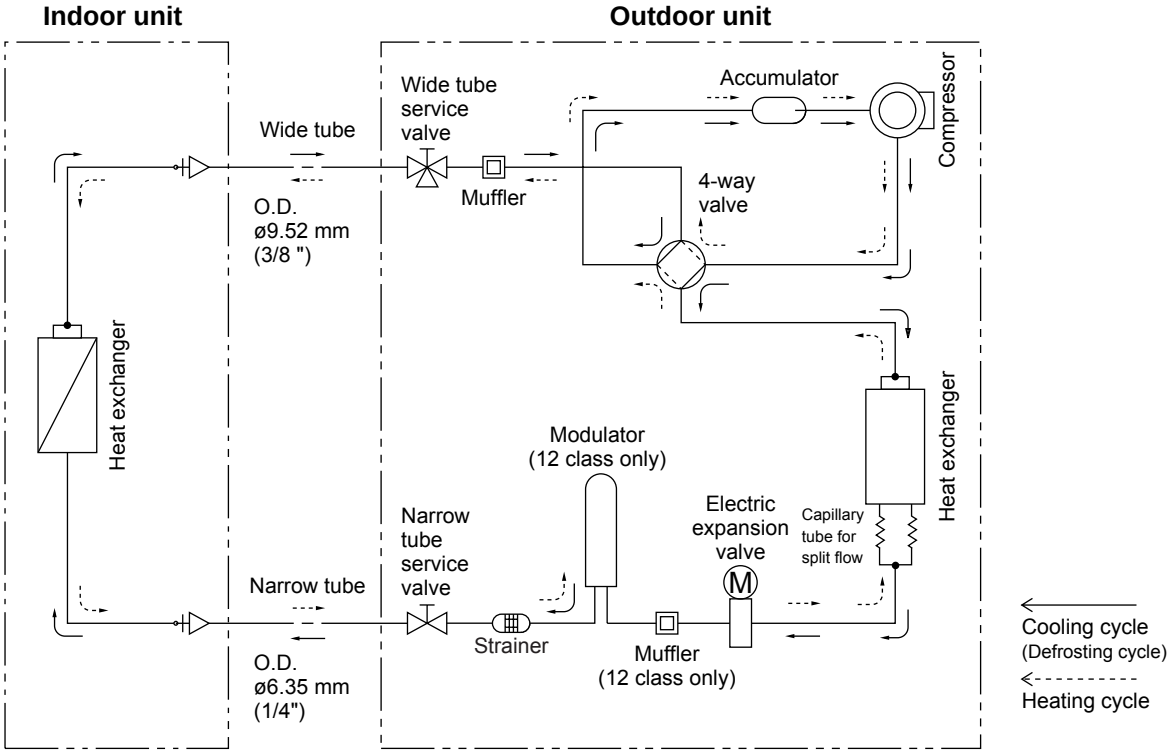

Insulation of Refrigerant Tubing

IMPORTANT

Because capillary tubing is used in the outdoor unit, both the wide and narrow tubes of this air conditioner become cold. To prevent heat loss and wet floors due to dripping of condensation, **both tubes must be well insulated** with a proper insulation material. The thickness of the insulation should be a min. 8 mm.

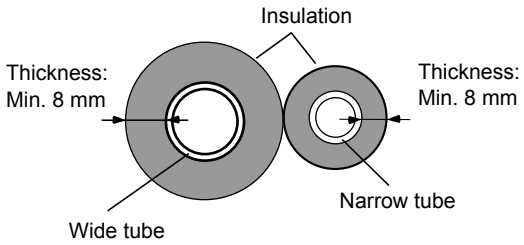

CAUTION

After a tube has been insulated, never try to bend it into a narrow curve because it can cause the tube to break or crack.

5. PERFORMANCE DATA

5-1. Temperature Charts

Indoor Unit **SAP-KRV93EH**
Outdoor Unit **SAP-CRV93EH**

■ Cooling Characteristics

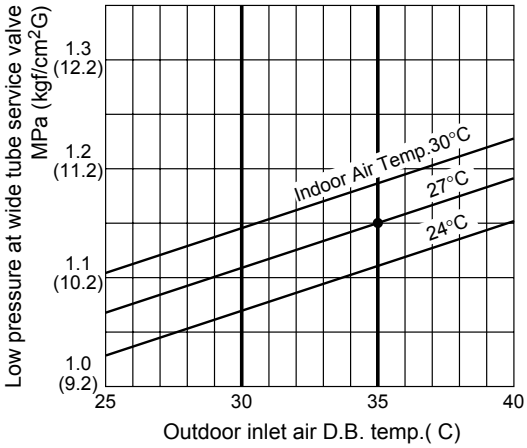

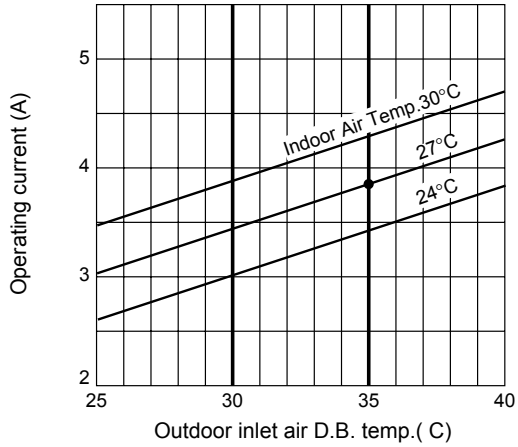

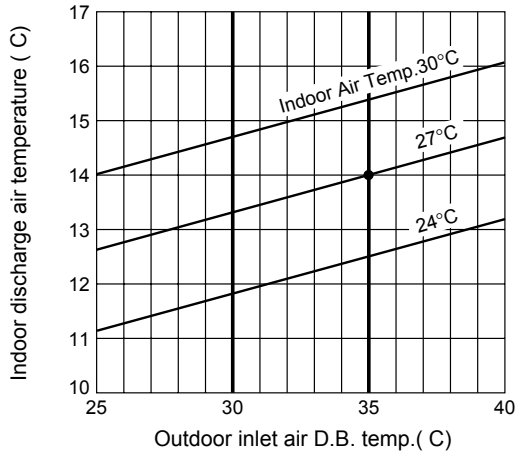

■ Heating Characteristics

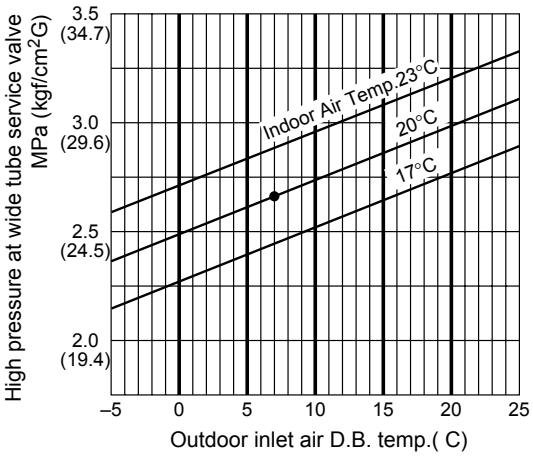

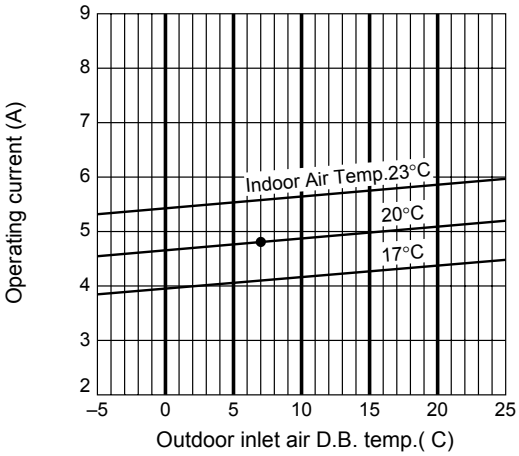

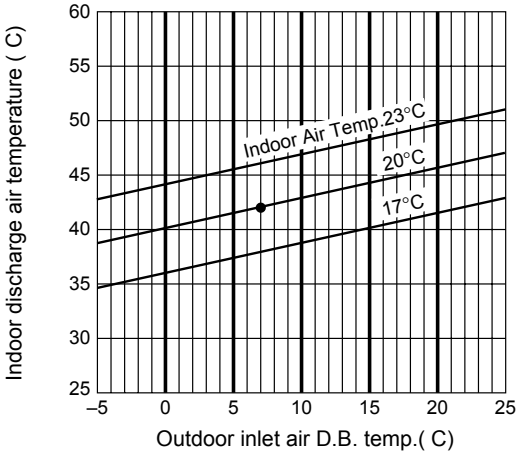

NOTE

Overload prevention operates to protect the air conditioner when outdoor ambient temperature becomes extremely high in heating mode. (Refer to “9-2. Overload prevention during heating.”)

● … Points of rating condition
Black dots in above charts indicate the following rating conditions.

Cooling: Indoor air temperature 27°C D.B. / 19°C W.B.
Outdoor air temperature 35°C D.B. / 24°C W.B.

Heating: Indoor air temperature 20°C D.B.
Outdoor air temperature 7°C D.B. / 6°C W.B.

Indoor Unit **SAP-KRV123EH**
Outdoor Unit **SAP-CRV123EH**

■ Cooling Characteristics

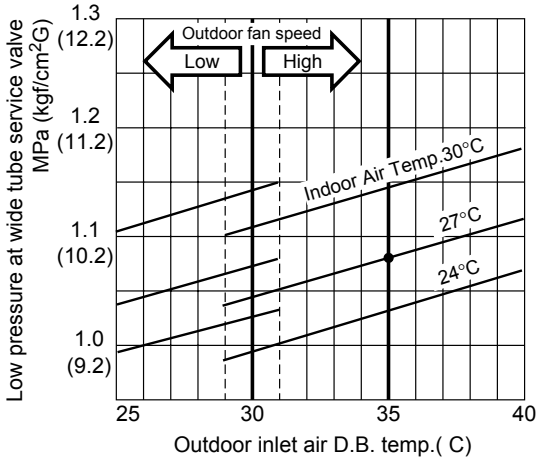

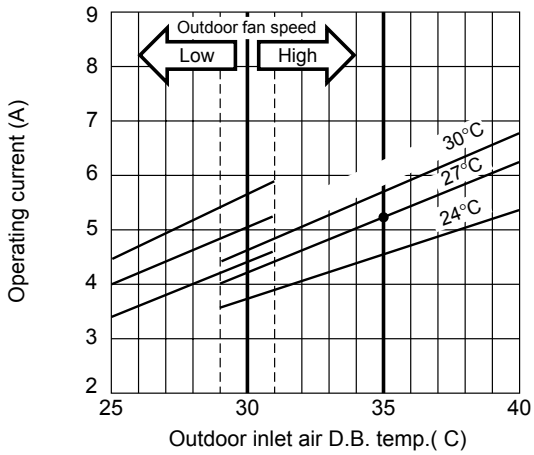

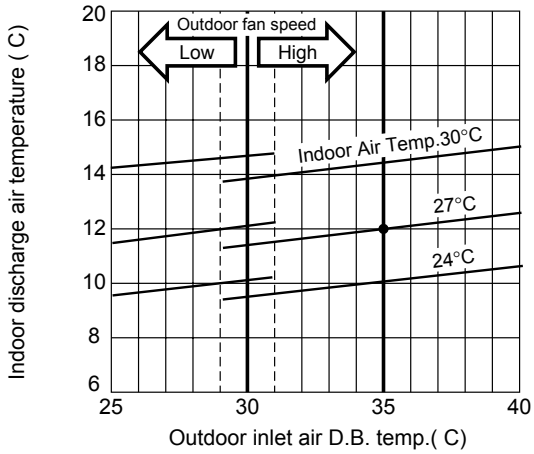

■ Heating Characteristics

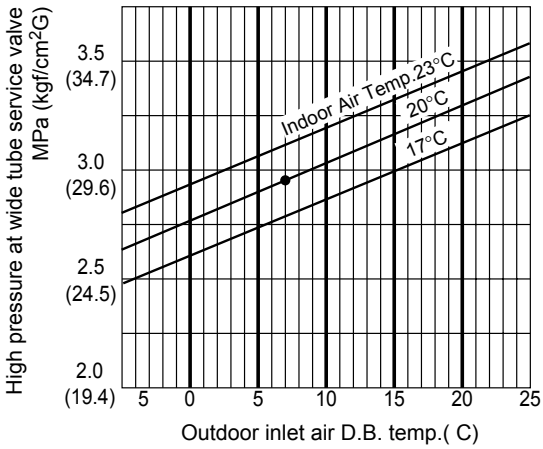

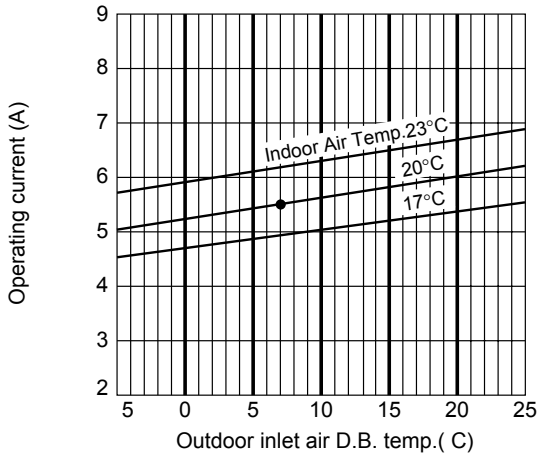

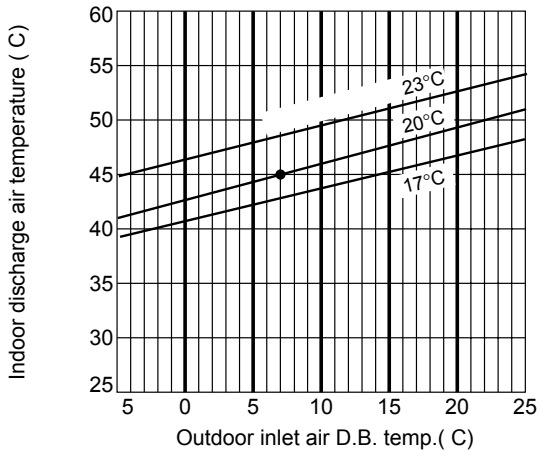

NOTE

Overload prevention operates to protect the air conditioner when outdoor ambient temperature becomes extremely high in heating mode. (Refer to “9-2. Overload prevention during heating.”)

● … Points of rating condition
Black dots in above charts indicate the following rating conditions.

Cooling: Indoor air temperature 27°C D.B. / 19°C W.B.
Outdoor air temperature 35°C D.B. / 24°C W.B.

Heating: Indoor air temperature 20°C D.B.
Outdoor air temperature 7°C D.B. / 6°C W.B.

5-2. Air Throw Distance Charts

Indoor Unit **SAP–KRV93EH**

Cooling

Room air temp. : 27°C
Fan speed : High

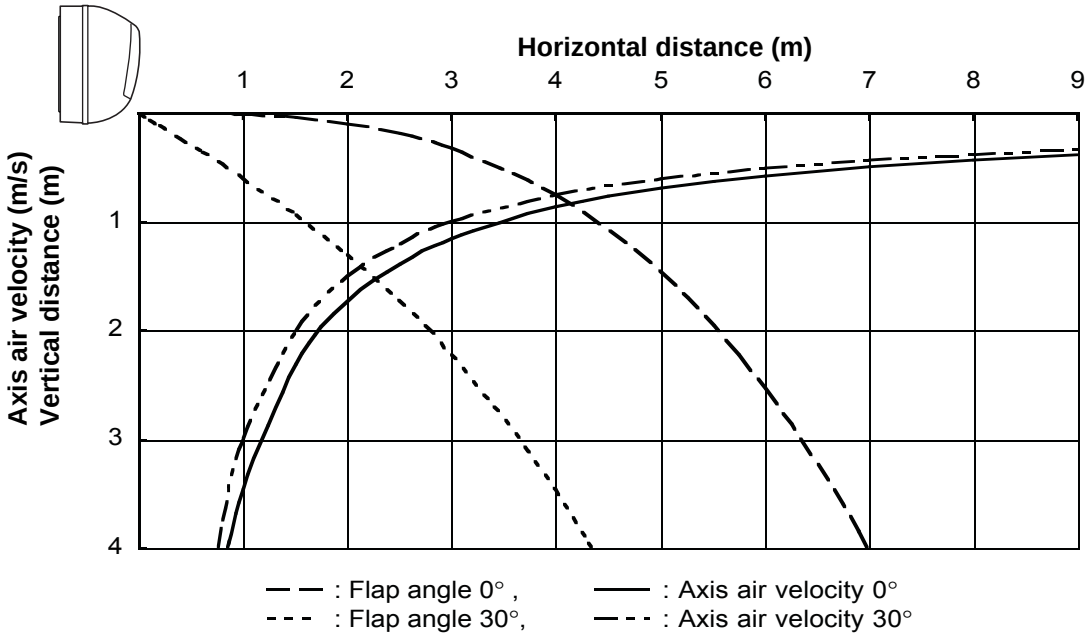

Heating

Room air temp. : 20°C
Fan speed : High

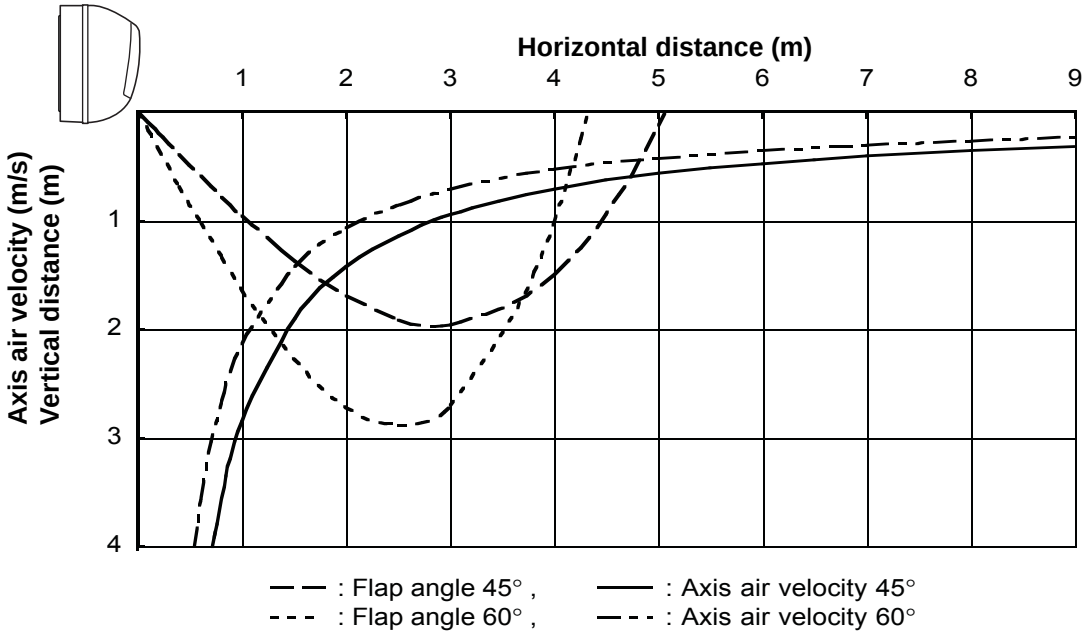

Indoor Unit **SAP–KRV123EH**

Cooling

Room air temp. : 27°C
Fan speed : High

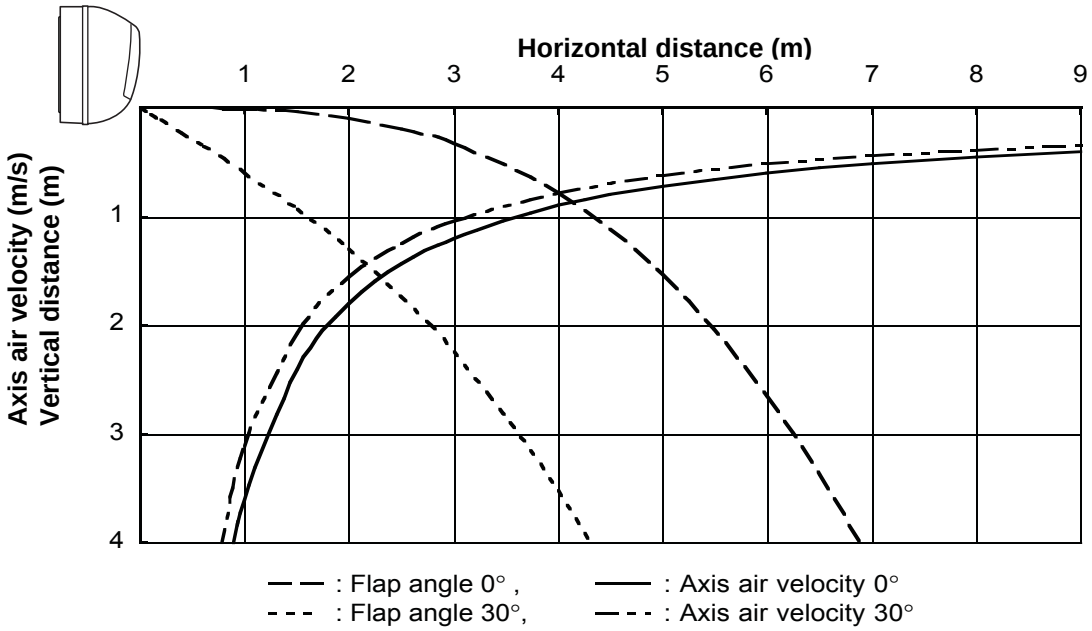

Heating

Room air temp. : 20°C
Fan speed : High

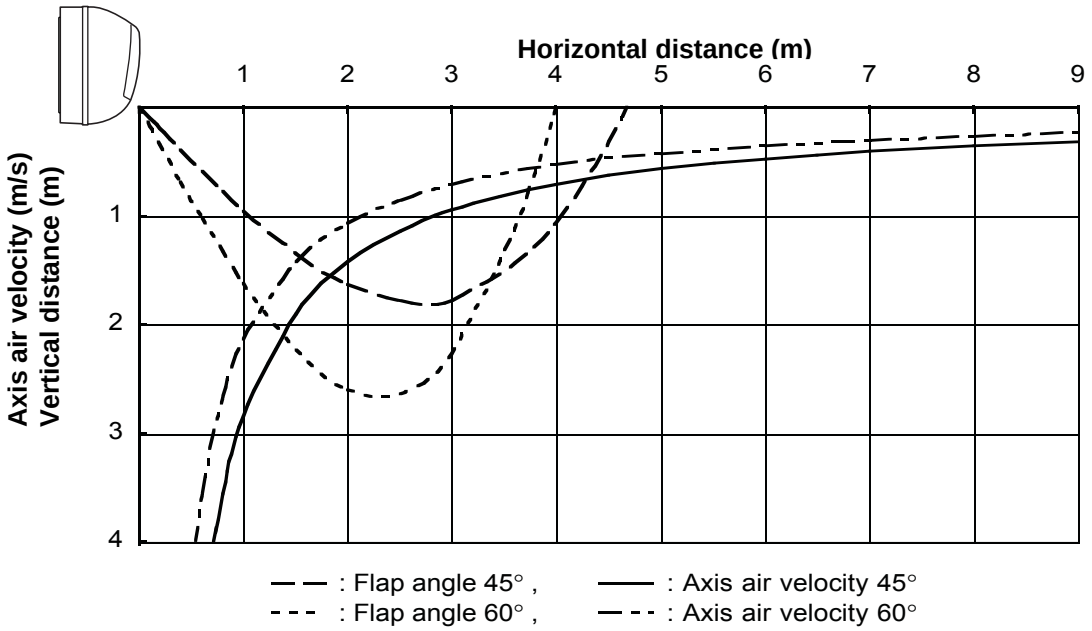

5-3. Operating Frequency Charts

Indoor Unit **SAP–KRV93EH**
Outdoor Unit **SAP–CRV93EH**

■ **Cooling**

230V Single-phase 50Hz

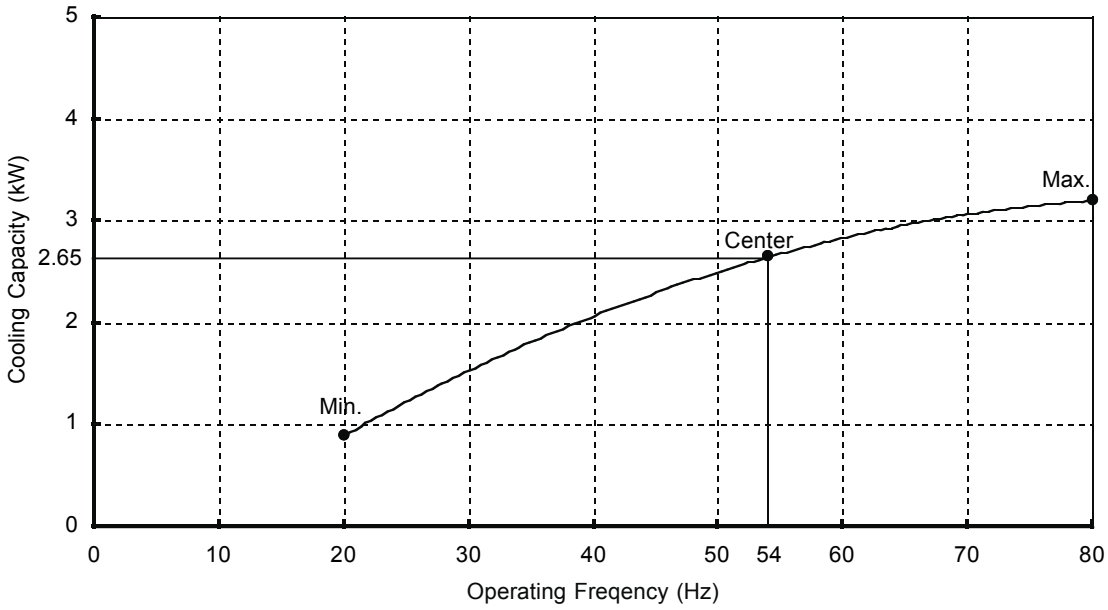

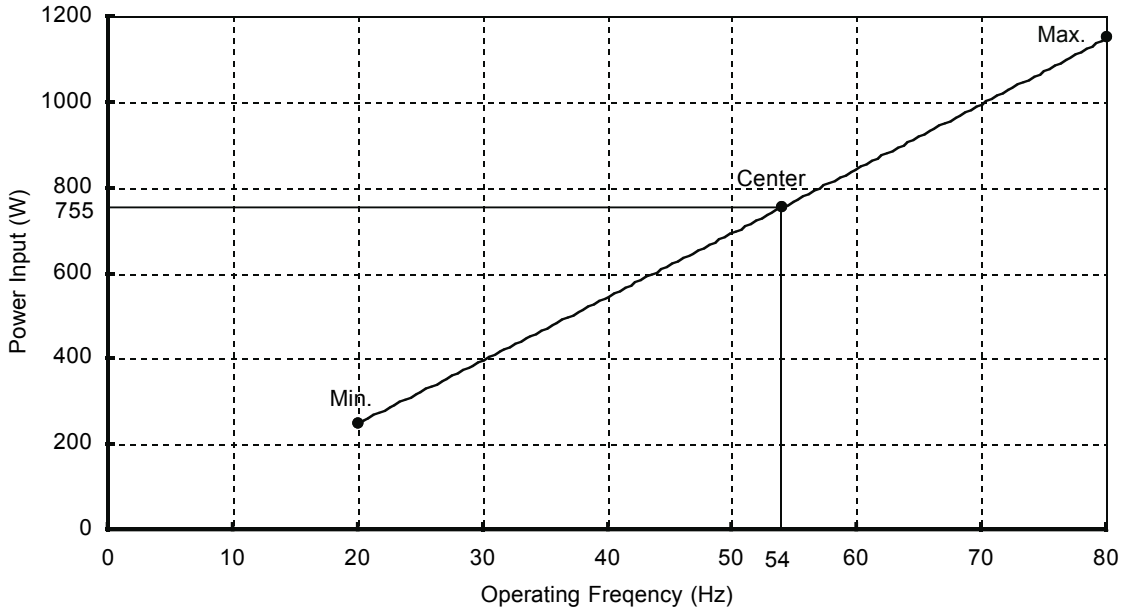

NOTE

1) Rating conditions in cooling are:
   Indoor: 27°C D.B. / 19°C W.B.
   Outdoor: 35°C D.B. / 24°C W.B.

2) Fan speed: High

■ **Heating**

230V Single-phase 50Hz

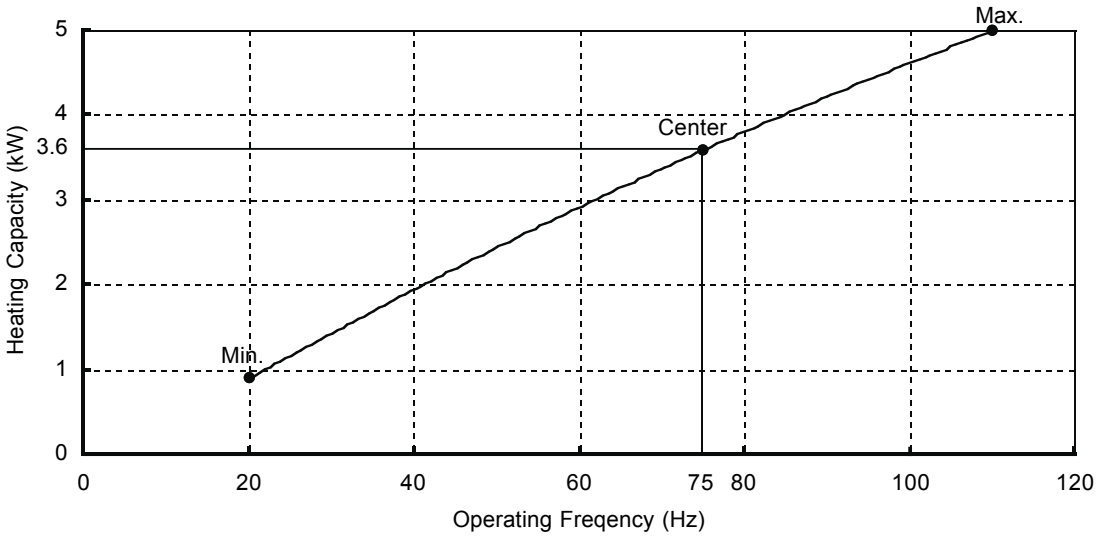

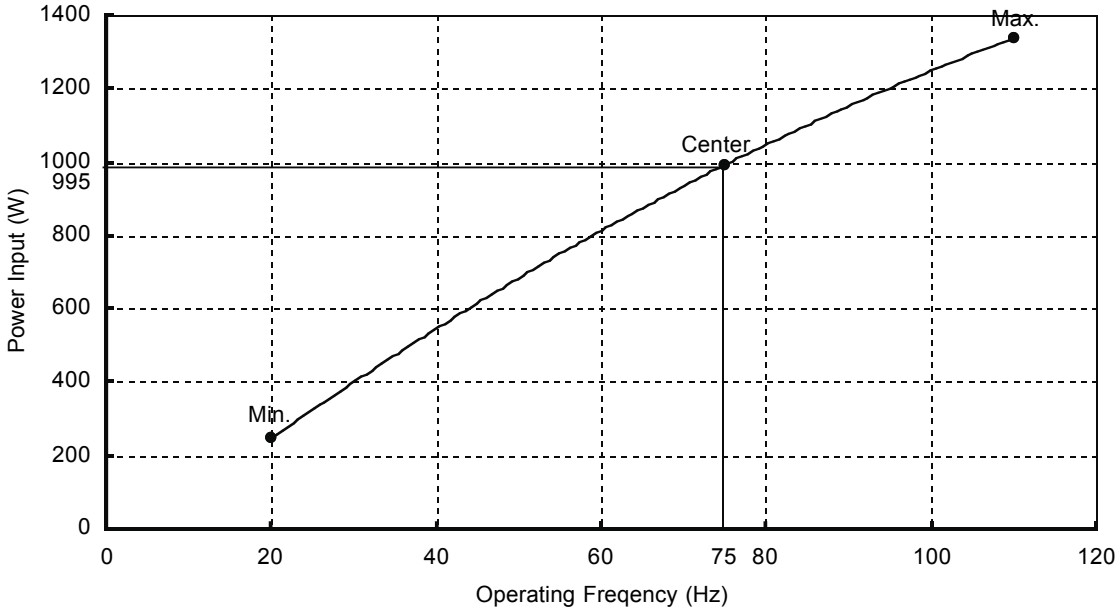

NOTE

1) Rating conditions in heating are:
   Indoor: 20°C D.B.
   Outdoor: 7°C D.B. / 6°C W.B.

2) Fan speed: High

Indoor Unit **SAP–KRV123EH**
Outdoor Unit **SAP–CRV123EH**

■ Cooling

230V Single-phase 50Hz

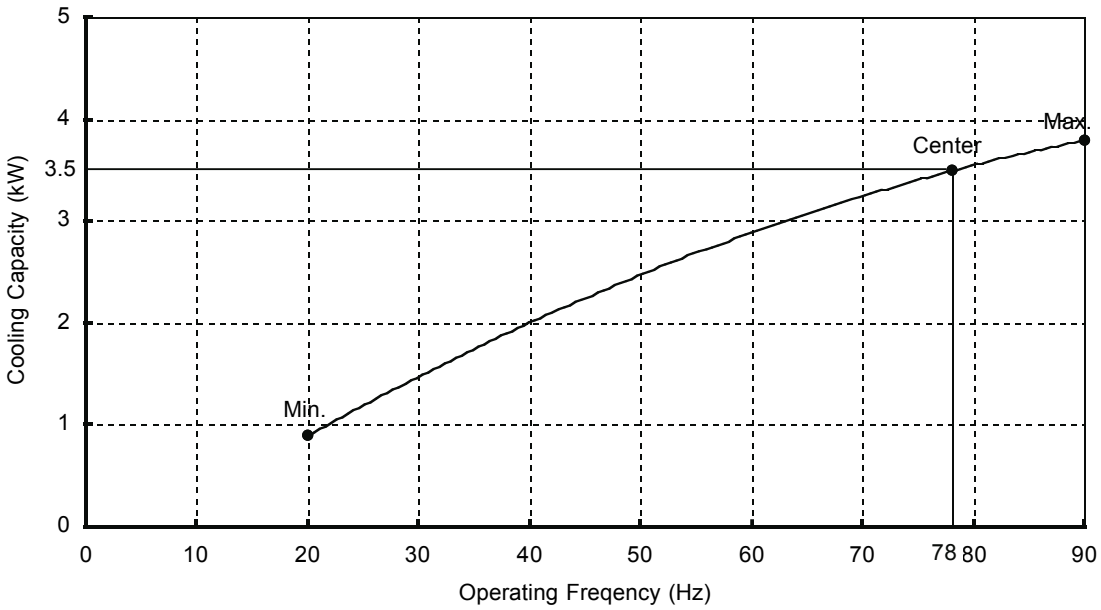

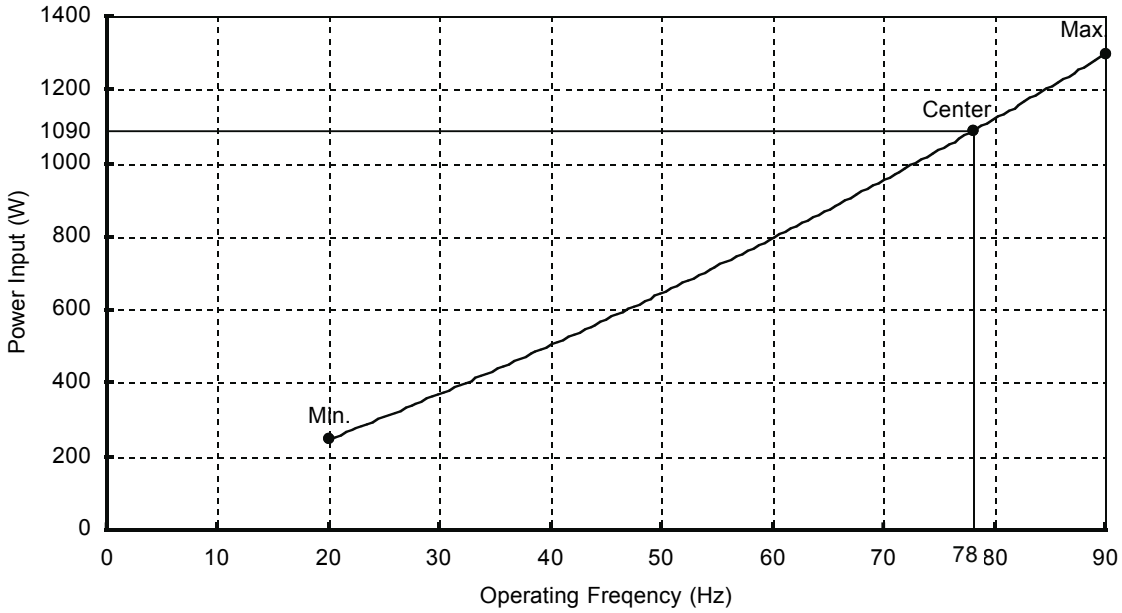

NOTE

1) Rating conditions in cooling are:
   Indoor: 27°C D.B. / 19°C W.B.
   Outdoor: 35°C D.B. / 24°C W.B.

2) Fan speed: High

■ Heating

230V Single-phase 50Hz

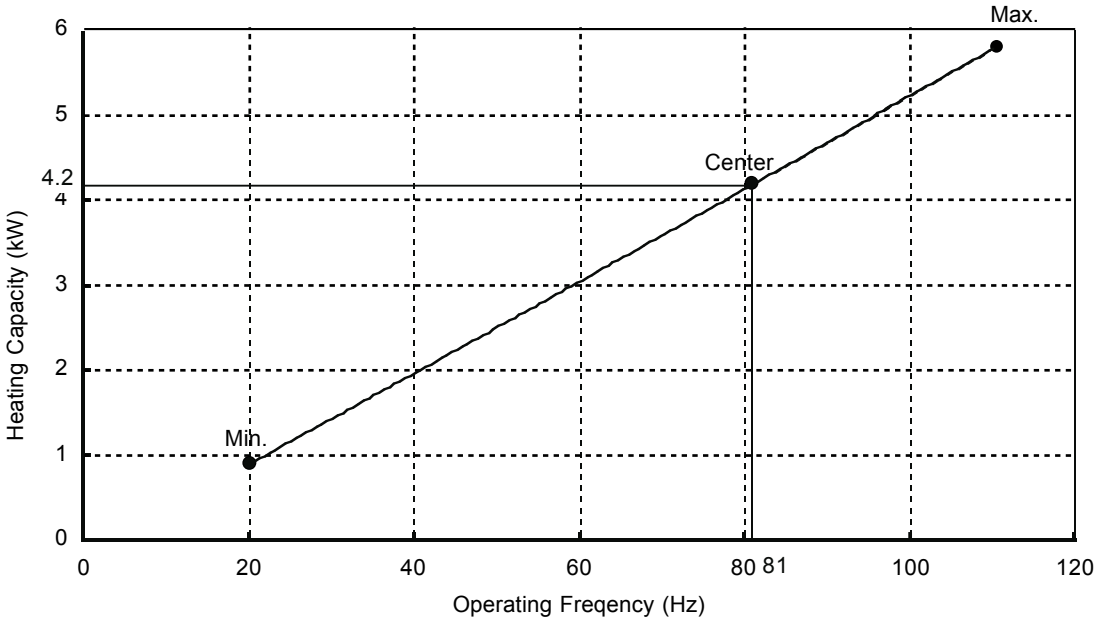

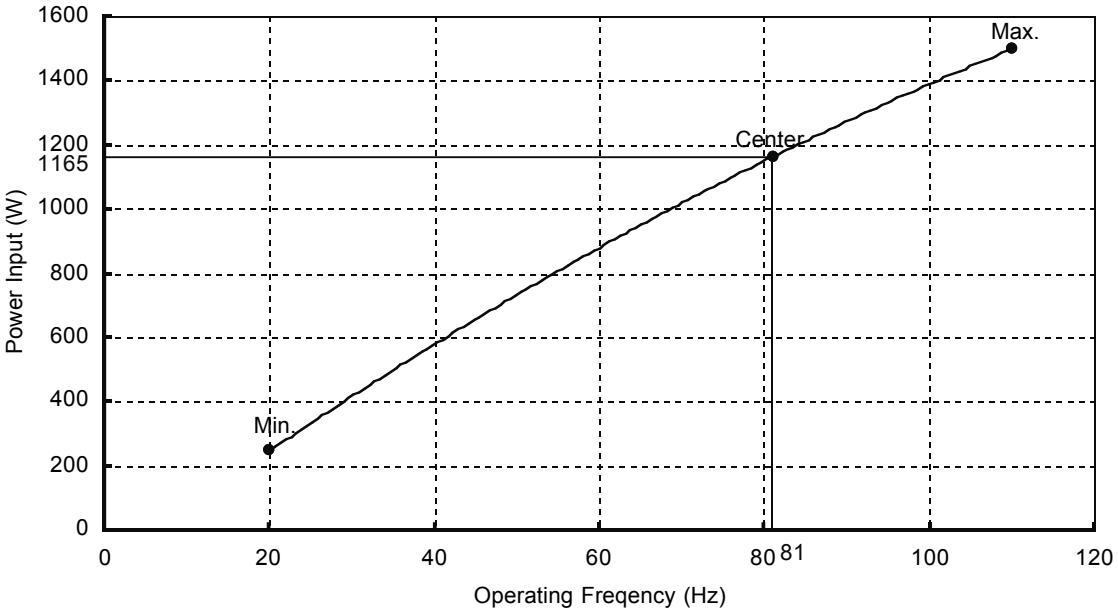

NOTE

1) Rating conditions in heating are:
   Indoor: 20°C D.B.
   Outdoor: 7°C D.B. / 6°C W.B.

2) Fan speed: High

6. ELECTRICAL DATA

6-1. Electrical Characteristics

Indoor Unit **SAP-KRV93EH**
Outdoor Unit **SAP-CRV93EH**

Cooling

			Indoor Unit	Outdoor Unit		Complete Unit
			Fan Motor	Fan Motor	Compressor	
Performance at			230V Single-phase 50Hz			
Rating conditions	Running amp.	A	0.17	0.21	3.48	3.86
	Power input	kW	0.033	0.048	0.674	0.755

Rating conditions: Indoor air temperature: 27°C D.B. / 19°C W.B.
Outdoor air temperature: 35°C D.B.

Heating

			Indoor Unit	Outdoor Unit		Complete Unit
			Fan Motor	Fan Motor	Compressor	
Performance at			230V Single-phase 50Hz			
Rating conditions	Running amp.	A	0.17	0.21	4.43	4.81
	Power input	kW	0.035	0.048	0.912	0.995

Rating conditions: Indoor air temperature 20°C D.B.
Outdoor air temperature 7°C D.B. / 6°C W.B.

Indoor Unit **SAP-KRV123EH**
Outdoor Unit **SAP-CRV123EH**

Cooling

			Indoor Unit	Outdoor Unit		Complete Unit
			Fan Motor	Fan Motor	Compressor	
Performance at			230V Single-phase 50Hz			
Rating conditions	Running amp.	A	0.17	0.14	4.90	5.21
	Power input	kW	0.035	0.030	1.025	1.090

Rating conditions: Indoor air temperature: 27°C D.B. / 19°C W.B.
Outdoor air temperature: 35°C D.B.

Heating

			Indoor Unit	Outdoor Unit		Complete Unit
			Fan Motor	Fan Motor	Compressor	
Performance at			230V Single-phase 50Hz			
Rating conditions	Running amp.	A	0.17	0.14	5.17	5.48
	Power input	kW	0.035	0.030	1.100	1.165

Rating conditions: Indoor air temperature: 20°C D.B.
Outdoor air temperature: 7°C D.B. / 6°C W.B.

6-2. Electric Wiring Diagrams

Indoor Unit **SAP-KRV93EH**
Outdoor Unit **SAP-CRV93EH**

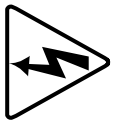

WARNING

To avoid electrical shock hazard, be sure to disconnect power before checking, servicing and/or cleaning any electrical parts.

Indoor Unit : SAP-KRV93EH

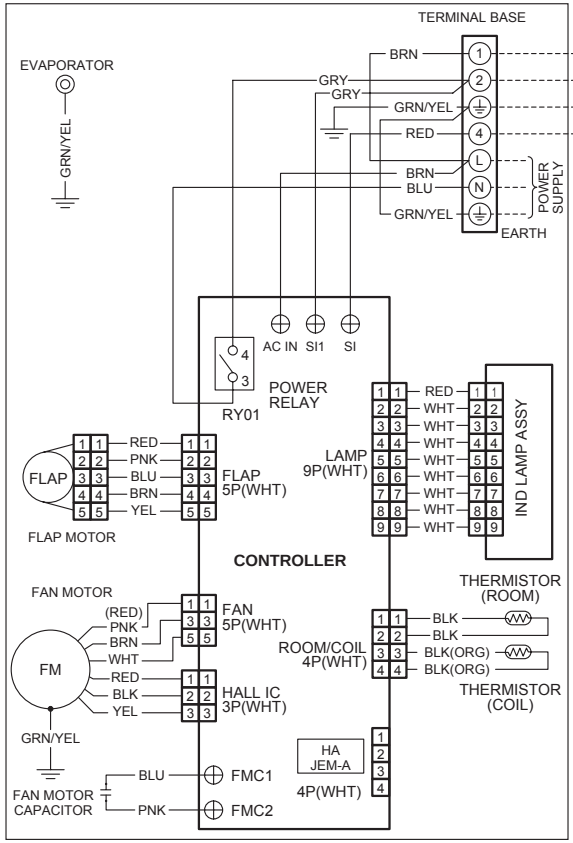

8FA-2-5257-143XX-1

Outdoor Unit : SAP-CRV93EH

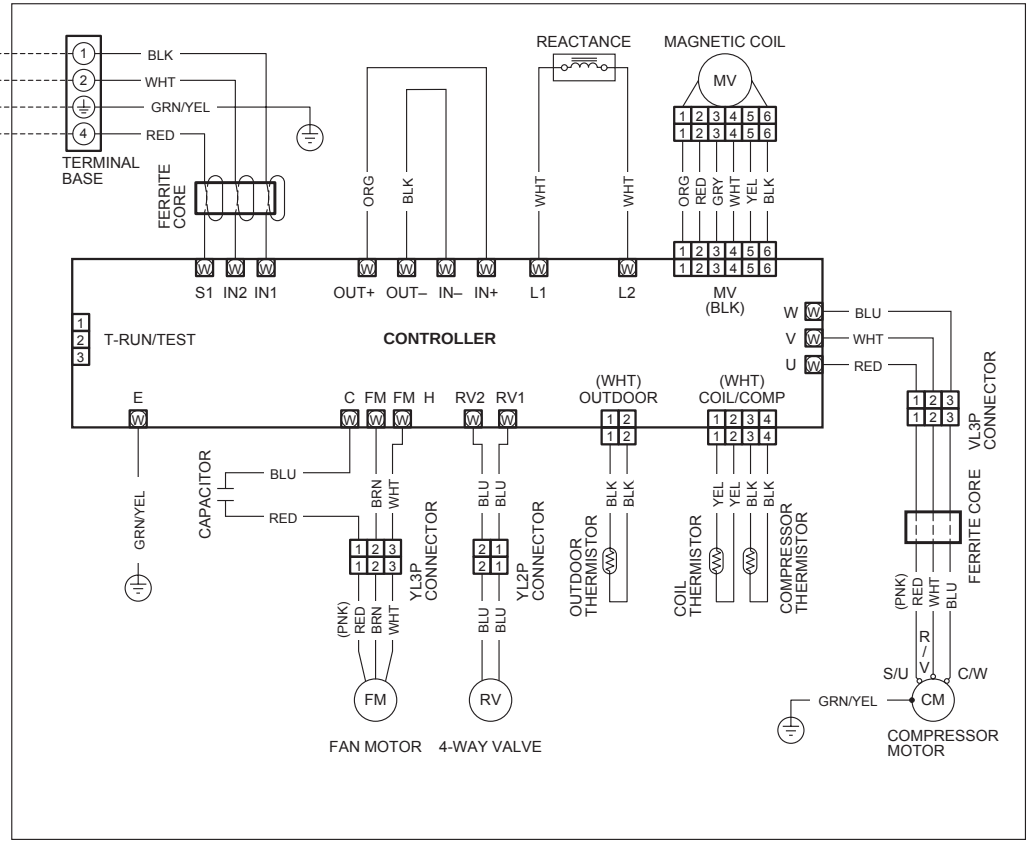

8FA-2-5257-145XX-0

Meaning of Abbreviations

	ABBREV.	MEANING
1	BLK	BLACK
2	BLU	BLUE
3	BRN	BROWN
4	GRN/YEL	GREEN/YELLOW
5	GRY	GREY
6	ORG	ORANGE
7	PNK	PINK
8	RED	RED
9	VLT	VIOLET
10	WHT	WHITE
11	YEL	YELLOW

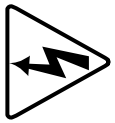

WARNING

To avoid electrical shock hazard, be sure to disconnect power before checking, servicing and/or cleaning any electrical parts.

Indoor Unit : SAP-KRV123EH

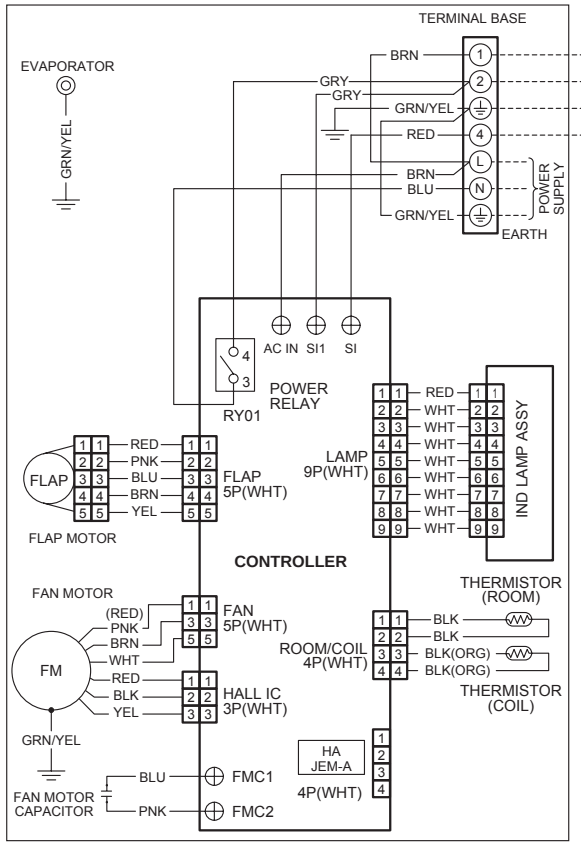

8FA-2-5257-143XX-1

Outdoor Unit : SAP-CRV123EH

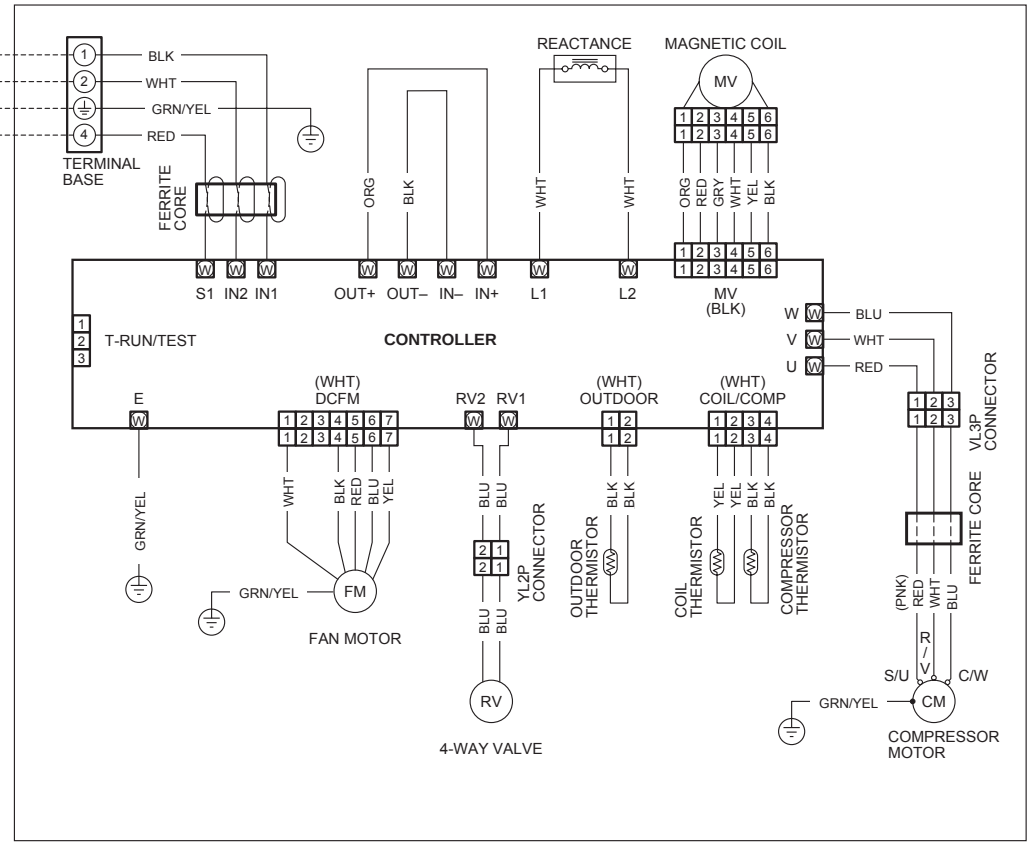

8FA-2-5257-146XX-0

Meaning of Abbreviations

	ABBREV.	MEANING
1	BLK	BLACK
2	BLU	BLUE
3	BRN	BROWN
4	GRN/YEL	GREEN/YELLOW
5	GRY	GREY
6	ORG	ORANGE
7	PNK	PINK
8	RED	RED
9	VLT	VIOLET
10	WHT	WHITE
11	YEL	YELLOW

7. INSTALLATION INSTRUCTIONS

7-1. Installation Site Selection

7-1-1. Indoor Unit

WARNING

To prevent abnormal heat generation and the possibility of fire, do not place obstacles, enclosures and grilles in front of or surrounding the air conditioner in a way that may block air flow.

AVOID:

- direct sunlight.
- nearby heat sources that may affect performance of the unit.
- areas where leakage of flammable gas may be expected.
- places where large amounts of oil mist exist.

DO:

- select an appropriate position from which every corner of the room can be uniformly cooled. (High on a wall is best.)
- select a location that will hold the weight of the unit.
- select a location where tubing and drain hose have the shortest run to the outside. (Fig. 1)
- allow room for operation and maintenance as well as unrestricted air flow around the unit. (Fig. 2)
- install the unit within the maximum elevation difference (H) above or below the outdoor unit and within a total tubing length (L) from the outdoor unit as detailed in Table 1 and Fig. 3.
- Install the indoor unit more than 1 meter away from any antenna or power lines or connecting wires used for television, radio, telephone, security system, or intercom. Electrical noise from any of these sources may affect operation.

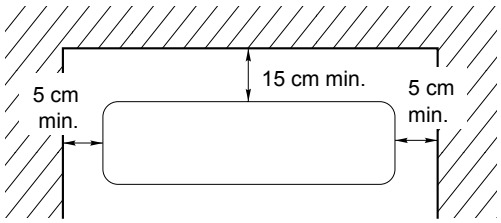

Front View

Fig. 1

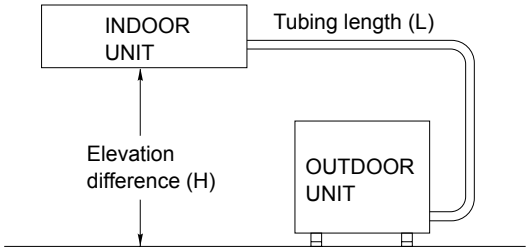

Fig. 2

CAUTION

For stable operation of the air conditioner, do not install wall-mounted type indoor units less than 1.5 m from floor level.

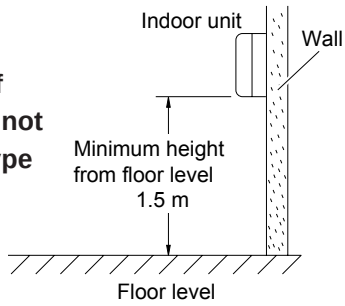

Fig. 3

Table 1

Model	Max. Allowable Tubing Length at Shipment (m)	Limit of Tubing Length (L) (m)	Limit of Elevation Difference (H) (m)	Required Amount of Additional Refrigerant (g/m)*
KRV93 / 123	7.5	15	7	15

* If total tubing length becomes 7.5 to 15 m (max.), charge additional refrigerant (R410A) by 15 g/m.
No additional compressor oil is necessary.

7-1-2. Outdoor Unit

AVOID:

- heat sources, exhaust fans, etc. (Fig. 4)
- damp, humid or uneven locations.

DO:

- choose a place as cool as possible.
- choose a place that is well ventilated.
- allow enough room around the unit for air intake/ exhaust and possible maintenance. (Fig. 5a)
- provide a solid base (level concrete pad, concrete block, 10 × 40 cm beams or equal), a minimum of 10 cm above ground level to reduce humidity and protect the unit against possible water damage and decreased service life. (Fig. 5a)
- Install cushion rubber under unit's feet to reduce vibration and noise. (Fig. 5b)
- use lug bolts or equal to bolt down unit, reducing vibration and noise.
- Install in a location where no antenna of a television or radio exists within 3 meters.

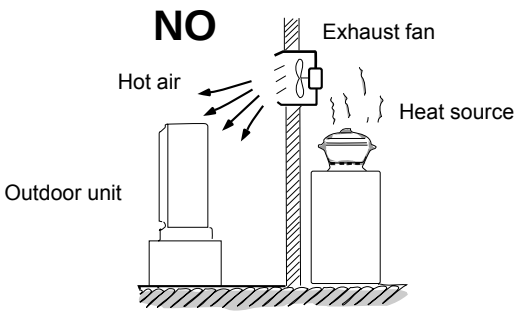

Fig. 4

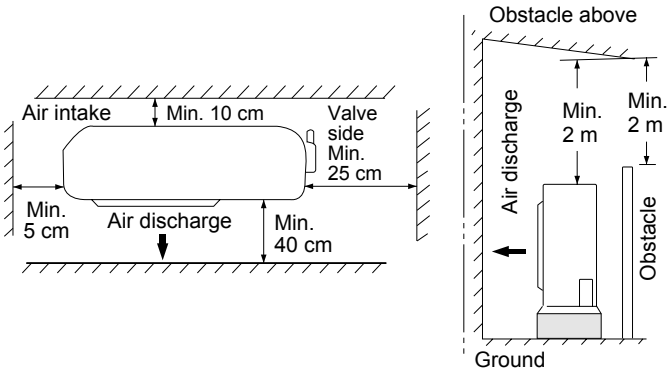

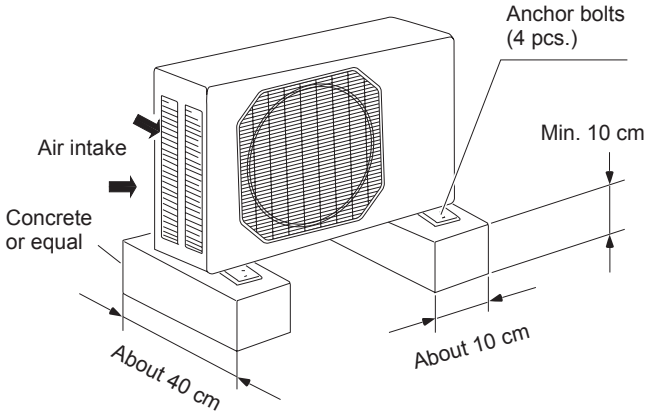

Fig. 5a

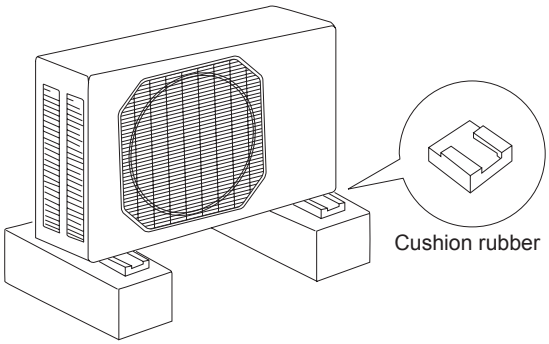

Fig. 5b

7-2. Recommended Wire Length and Diameter

Regulations on wiring diameter differ from locality to locality. For field wiring requirements, please refer to your local electrical codes. Carefully observe these regulations when carrying out the installation.
Table 2 lists recommended wire lengths and diameters for power supply systems.

NOTE

Refer to the wiring system diagram (Fig. 6) for the meaning of “A”, “B” and “C” in Table 2.

Table 2

Cross-Sectional Area (mm^2) / Model	(A)+(B) (A) Power Supply Wiring Length (m) (B) Power Line Length (m)		(C) Control Line Length (m)	Fuse or Circuit Breaker Capacity
	2	3.5	0.75	
CRV93	60	100	160	10A
CRV123	60	100	160	

WARNING

- **Be sure to comply with local codes on running the wire from the indoor unit to the outdoor unit (size of wire and wiring method, etc.).**
- **Each wire must be firmly connected.**
- **No wire should be allowed to touch refrigerant tubing, the compressor, or any moving part.**

WIRING SYSTEM DIAGRAM

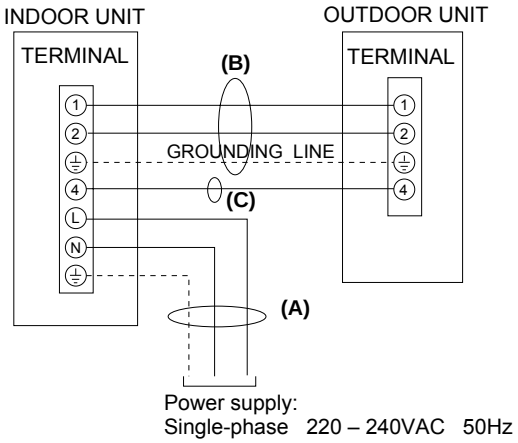

Fig. 6

WARNING

- **To avoid the risk of electrical shock, each air conditioner unit must be grounded.**
- **For the installation of a grounding device, please observe local electrical codes.**
- **Grounding is necessary, especially for units using inverter circuits, in order to release charged electricity and electrical noise caused by high tension. Otherwise, electrical shock may occur.**
- **Place a dedicated ground more than 2 meters away from other grounds and do not have it shared with other electric appliances.**

CAUTION

Be sure to connect the power supply line to the indoor unit as shown in the wiring diagram. The outdoor unit draws its power from the indoor unit.

7-3. Remote Control Unit Installation Position

The remote control unit can be operated from either a non-fixed position or a wall-mounted position.

To ensure that the air conditioner operates correctly, do not install the remote control unit in the following places:

- In direct sunlight
- Behind a curtain or other place where it is covered
- More than 8 m away from the air conditioner
- In the path of the air conditioner's airstream
- Where it may become extremely hot or cold
- Where it may be subject to electrical or magnetic interference
- Where there is an obstacle between the remote control unit and the air conditioner (since a check signal is sent from the remote control unit every 5 minutes)

7-3-1. Mounting on a Wall

Before mounting the remote control unit, press the ON/OFF operation button at the mounting location to make sure that the air conditioner operates from that location. The indoor unit should make a beeping sound to indicate that it has received the signal.

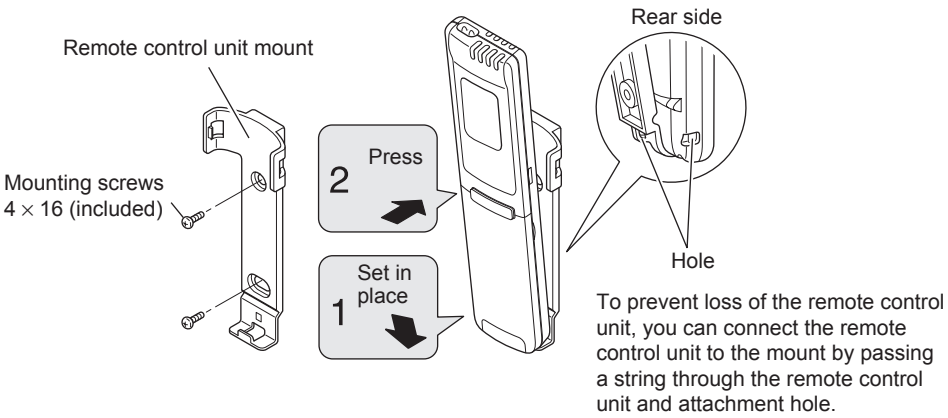

To take out the remote control unit, pull it forward.

Fig. 7

7-4. How to Test Run the Air Conditioner

After turning on power to the air conditioner, use the remote controller and follow the steps below to conduct the test run.

(1) Set the remote controller in Test Run mode. (Fig. 8a)

a) Press and hold the QUIET button.

b) Then press and hold the 1HR TIMER button.

c) At the same time, press the ACL (reset) button once. Use a pointed object such as the tip of a pen to press the ACL button.

- After a few seconds, "❄" appears and "oP-1" blinks in the remote controller display area. (Fig. 8b)

d) Release the 1HR TIMER button.

e) Release the QUIET button.

(2) Start Cooling mode test run by pressing the ON/OFF operation button of the remote controller. (Fig. 8a)

- This starts the fan producing uncooled forced air with the 3 indicator lamps (OPERATION lamp, TIMER lamp and QUIET lamp) on the main unit blinking. (Fig. 8c)
- After 3 minutes, the system shifts into cooling operation, and cool air will start to be felt. Cool mode test run is unaffected by the room temperature.

(3) Press the ON/OFF operation button of the remote controller again to stop the test run. (Fig. 8a)

(4) Finally press the ACL (reset) button of the remote controller to release it from Test Run mode to return to normal mode. (Fig. 8a)

- "❄" and "oP-1" will disappear from the remote controller display area.

IMPORTANT

After the test run is completed, be sure to press the ACL (reset) button to return to normal mode. The air conditioner will not operate correctly if this is not done.

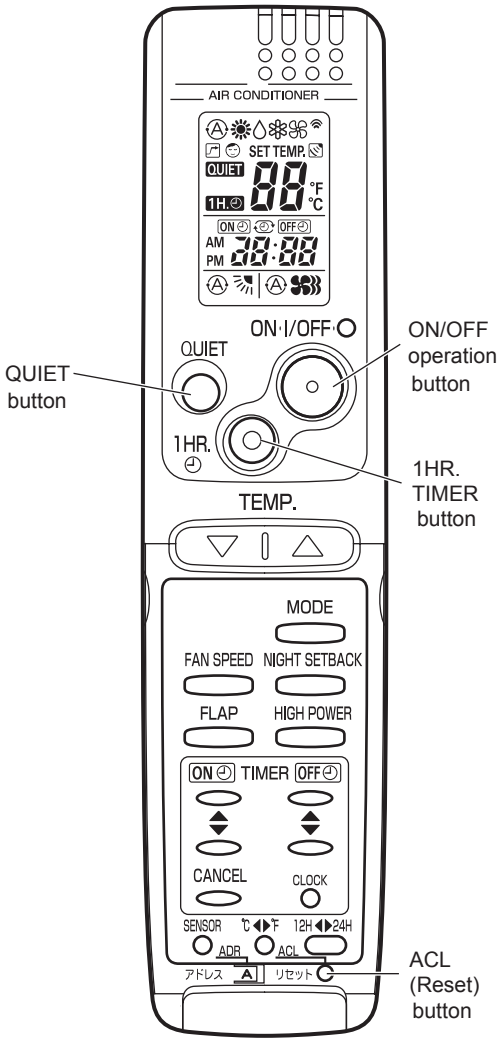

Fig. 8a

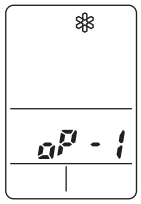

Fig. 8b

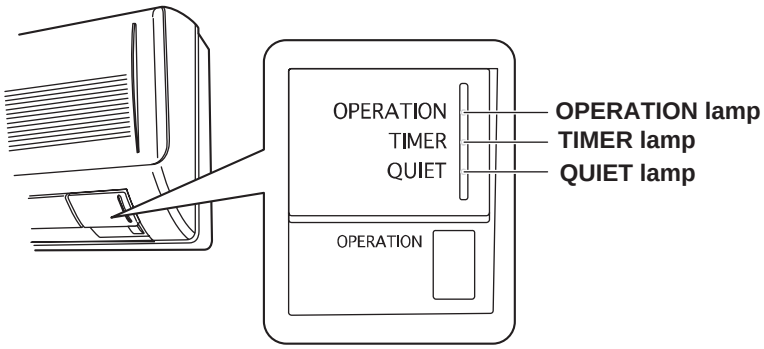

Fig. 8c

7-5. Remove the Grille to Install the Indoor Unit

Basically, these models can be installed and wired without removing the grille. If access to any internal part is needed, follow the steps as given below.

CAUTION **Be sure to wear work gloves during installation to avoid being cut by the sharp aluminum fins of the heat exchanger.**

How to remove the grille

(1) Grasp both ends of the air intake grille, and remove it by opening towards the front and pulling towards you. (Fig. 9a)

(2) Remove the 2 screws. (Fig. 9b)

(3) Remove the screw on the right side cover plate and open the cover. (Fig. 10a)

(4) Take out the thermistor from the grille. (Fig. 10b)

(5) Pull the lower part of the grille toward you to remove. (Fig. 11a)

(6) Use a standard screwdriver to push on the tabs to remove the grille.

How to replace the grille

(1) Reinstall the grille into the lower part while aligning its tabs on the upper part. (Fig. 11b) Insert the tabs in the slots and push the lower part of the grille back into position.

(2) Make sure that the grille and frame are firmly fitted together by engaging the tabs.

(3) Attach the thermistor on the grille. (Fig. 10a)

(4) Close the cover and replace the screw. (Fig. 10a)

(5) Affix the grille with the 2 previously removed screws. (Fig. 9b)

(6) Install the air intake grille.

(a) Allow the edge of the air intake grille to slide into the top of the indoor unit, and then insert it all the way inside. (Fig. 12a)

(b) Press the bottom right and left corners of the air intake grille to attach it to the indoor unit. (Fig. 12b)

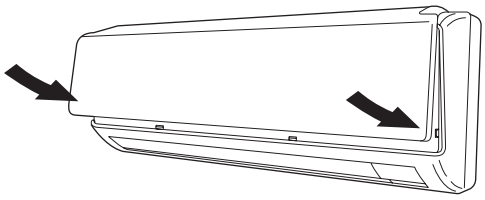

Fig. 12b

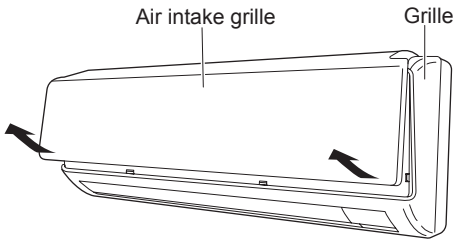

Fig. 9a

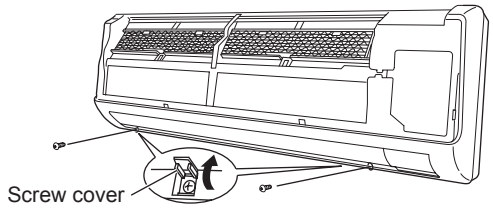

Fig. 9b

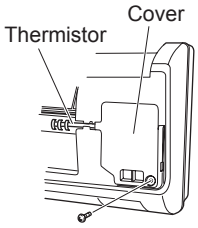

Fig. 10a

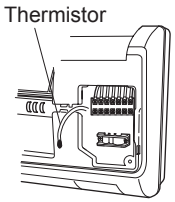

Fig. 10b

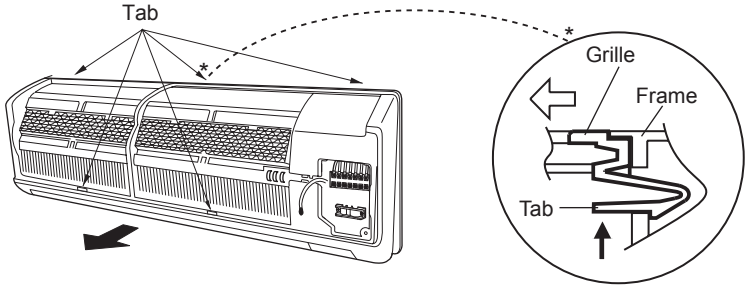

Fig. 11a

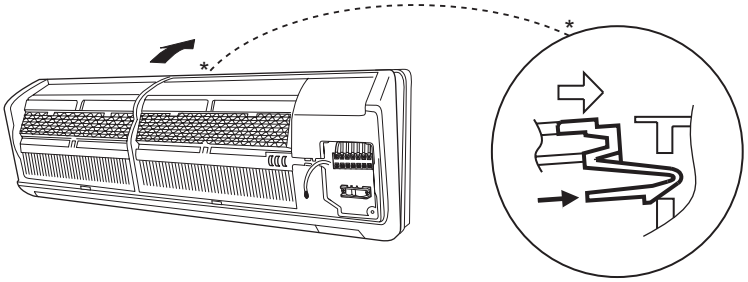

Fig. 11b

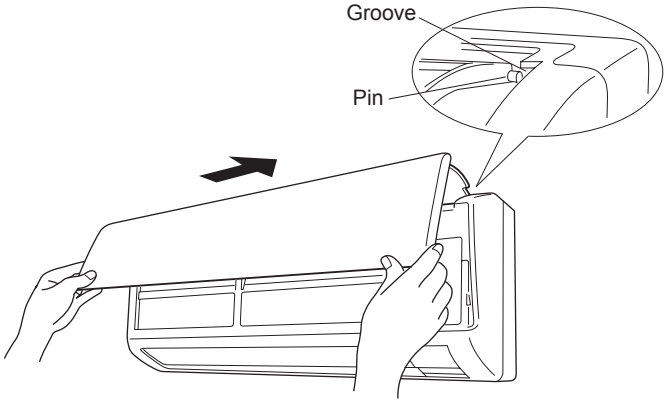

Fig. 12a

8. MAINTENANCE

8-1. Address Setting of the Remote Control Unit

The address can be set in order to prevent interference between remote controllers when two Sanyo indoor units are installed near each other. The address is normally set to “A.” To set a different address, it is necessary to change the address on the second remote controller.

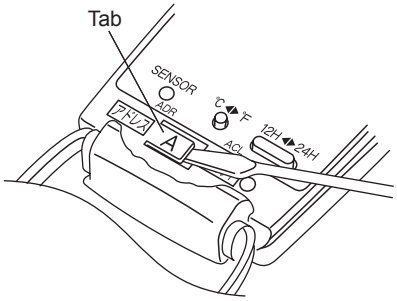

Fig. 13

NOTE

Once changed, you cannot restore the original address setting of the air conditioner.

(1) Switch on the power source.

(2) Break the address-setting tab marked “A” on the second remote controller to change the address (Fig. 13). When the tab is removed, the address is automatically set to B (Fig. 14).

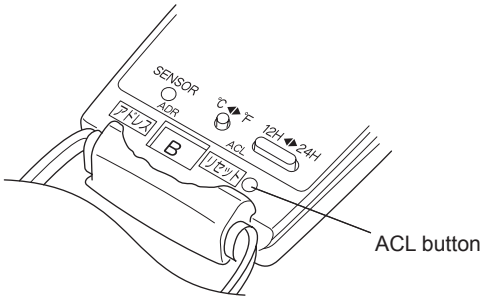

Fig. 14

(3) Press and hold the remote controller QUIET button and 1 HR TIMER button. At the same time, press the ACL (reset) button. Use a thin object such as the tip of a pen to press the ACL button. When this has been done, “oP-1” (test run) appears, blinking, in the remote controller clock display area.

(4) Each time the 1 HR TIMER button is pressed, the display changes as shown below. Press this button 2 times to change the display to “oP-7” (address setting). (Fig. 15)

oP-1 Test run mode
⇩
oP-3 Self-diagnostic mode
⇩
oP-7 Address setting mode

(5) “oP-7” has now been selected for address setting.

(6) Press the ON/OFF operation button on the remote controller. (Fig. 15) Check that the “beep” signal-received sound is heard from the second indoor unit (approximately 5 times). The sound you hear is the signal that the remote controller address has been changed.

(7) Finally press the remote controller ACL (reset) button to cancel the blinking “oP-7” display. (Fig. 15)

Changing of the second remote controller address is now completed.

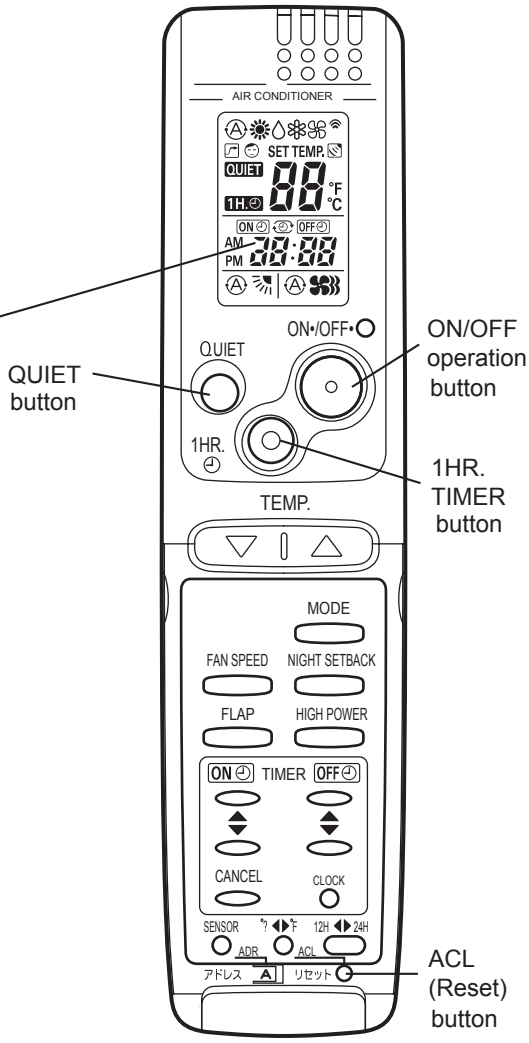

Fig. 15

8-2. Disconnecting and Connecting Positive Connector for Outdoor Unit

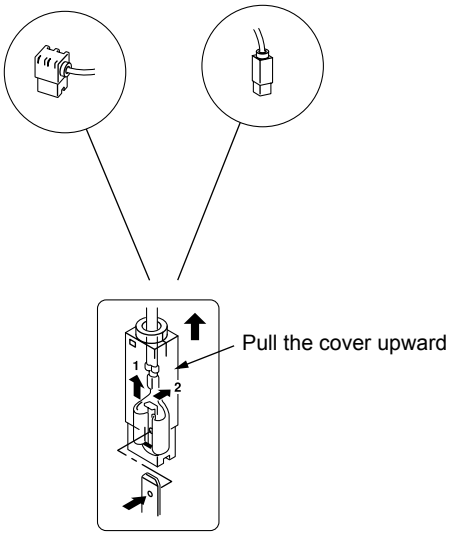

When the cover is pulled upward, the lock is released with the sequence of 1 and 2.

One of the two types of connectors illustrated at left is used. Their basic structure is the same for each.

How to Disconnect

Hold the resin connector cover, and pull the connector off. You cannot disconnect the connector by pulling the wire since it is locked inside. Always hold the cover to disconnect. (See illustration at left.) For the connector without the resin cover, push the lock in the direction of “2” while pulling it off.

How to Connect

In order to connect, hold the resin cover of the connector and push it in. Confirm the click sound for the inside lock.

9. FUNCTIONS

9-1. Operation Functions

■ Emergency operation

Emergency operation is available when the remote controller malfunctions, has been lost, or otherwise cannot be used.

To operate the system, press the OPERATION button, which is also used as the receiver, below the unit display. Each time this button is pressed, the OPERATION lamp changes color to indicate the type of operation. Select the desired type of operation.

- The set temperature is 2°C below the detected room temperature in the case of cooling operation, and 2°C above the room temperature in the case of heating operation. The flap and fan speed settings are AUTO.

■ AUTO cooling/heating operation

● **Selecting the operation mode**

- When AUTO mode is selected, the microprocessor calculates the difference between the set temperature and the room temperature, and automatically switches to Cooling or Heating mode.

  Room temp. ≥ Set temp. ⟶ COOL
  Room temp. ≤ Set temp. ⟶ HEAT

- As shown by the example in the figure below, with AUTO cooling/heating operation, the mode changes between Heating and Cooling mode according to changes in the relationship between the current room temperature and the set temperature.

Example

Example of operation in AUTO mode with the set room temperature at 23°C.

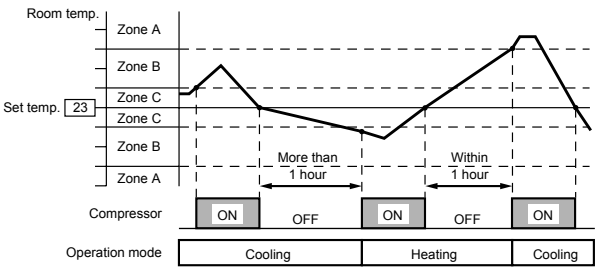

■ SENSOR DRY

During DRY operation, the system adjusts the room temperature and fan speed according to the conditions in the room, in order to maintain a comfortable room environment.

SENSOR DRY operation

- DRY operation is as shown in the figure below.

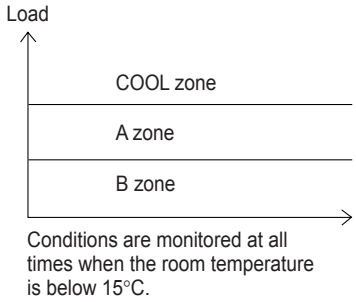

DRY A

The compressor operation frequency varies.
The indoor fan operates with 1/f fluctuation.

DRY B

The compressor operates at a low operating frequency.
The indoor fan operates with 1/f fluctuation.

Monitor

- Monitoring operation takes place when the room temperature is below 15°C, or more than 3°C below the set temperature.
- When the monitoring range is entered, the compressor stops, and the indoor fan operates with 1/f fluctuation.

■ PAM-α control

- In order to further improve inverter performance, control is switched between PWM control at low operation speeds, and PAM control at high operation speeds, making the most effective use of power.

■ HIGH POWER

This function acts to raise the power but keeps the AC system in the same operating mode.
This function is set with the HIGH POWER button on the remote controller.
(It can be set regardless of the temperature and fan speed settings.)

● **HIGH POWER operation from remote controller**

The unit operates at maximum output for 30 minutes, regardless of the desired temperature.
The fan speed is 1 step above "High."

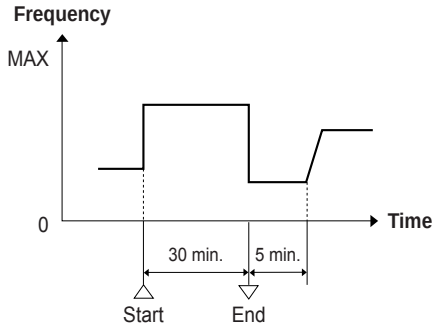

NOTE

- When HIGH POWER operation ends, the unit operates at low Hz for 5 minutes, regardless of the thermostat OFF conditions.
- When in DRY mode, operation is in the cooling zone.

■ NIGHT SETBACK

- When NIGHT SETBACK operation is set, the temperature and fan speed settings will be adjusted automatically to allow comfortable sleep.
- When NIGHT SETBACK operation is set, "mark" appears on the remote controller. The main unit display lamp also becomes dimmer.

● **COOL and DRY modes**

- The indoor unit fan speed is automatically lowered for quiet operation.
- The temperature setting is raised by 1°C 30 minutes after NIGHT SETBACK operation is set. This repeats again after another 30 minutes have passed to gradually raise the temperature.

● **HEAT mode**

- The indoor unit and outdoor unit fan speeds are automatically lowered for quiet operation.
- The temperature setting is lowered by 2°C 30 minutes after NIGHT SETBACK operation is set.
  This repeats again after another 30 minutes have passed to gradually lower the temperature.

■ Lamp colors

OPERATION lamp	
HEAT operation	Red
DRY operation	Orange
COOL operation	Green
TIMER lamp	Green
QUIET lamp	Green

■ Timer backup

- Operation stops if there are no operator controls for 25 hours or longer after unit operation switched from OFF to ON by use of ON timer operation.

9-2. Protective Functions

■ Overload prevention during heating

During HEAT operation, the temperature of the indoor heat exchanger is used to control the frequency and lessen the load on the compressor before the protective device is activated.

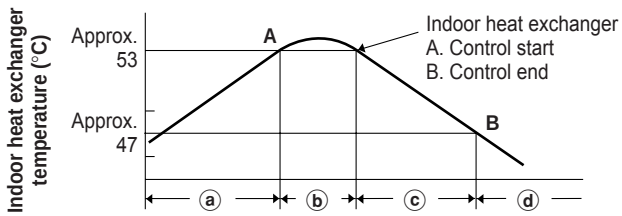

ⓐ Area: Automatic capacity control

ⓑ When Point A has been exceeded, the operation frequency is reduced by a certain proportion.

ⓒ Area: Frequency increase is prohibited.

ⓓ At Point B and below, overload prevention is ended and control is the same as in the ⓐ area.

■ Freeze prevention

During COOL or DRY operation, freezing is detected and operation is stopped when the temperature of the indoor heat exchanger matches the conditions below.

① Freeze-prevention operation is engaged when the temperature of the indoor heat exchanger is below 6°C.

② Restart after freeze-prevention operation occurs when the temperature of the indoor heat exchanger reaches 8°C or above.

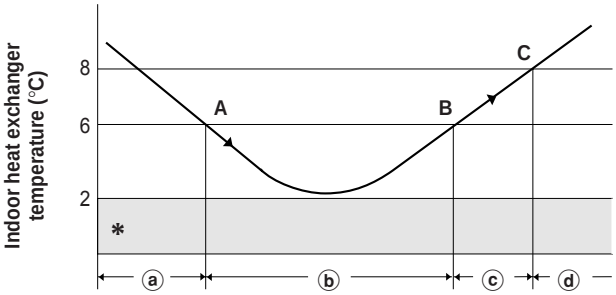

ⓐ Area: Automatic capacity control

ⓑ When the temperature drops below Point A, the operation frequency is reduced by a certain proportion.

ⓒ Area: Frequency increase is prohibited.

ⓓ When the temperature reaches Point C or above, freezing prevention is ended and control is the same as in the ⓐ area.

* When the temperature drops to below 2°C (continuously for 2 minutes or longer), the compressor stops.
Once the freeze condition is detected, the air conditioner will work less than the maximum frequency until it is turned off.

■ Cold-air prevention during heating

During heating, the fan speed is set to “LL” (very low) or stopped. As the temperature of the indoor heat exchanger rises, the fan speed is changed to the set speed.

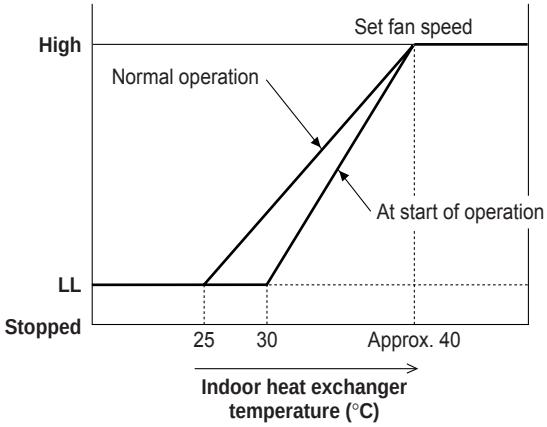

NOTE

- The fan speed is forcibly changed to “LL” beginning 30 seconds after the thermostat turns OFF.
- Normal operation refers to operation when the room temperature has approached the set temperature.
- When HEAT operation starts, the indoor fan is stopped until the temperature of the indoor heat exchanger reaches 20°C or higher, or until the room temperature reaches 15°C or higher.

■ Compressor discharge temperature control

This function controls the operation frequency to prevent the compressor discharge temperature from rising more than a specified temperature.

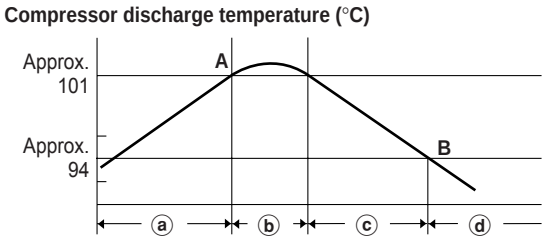

ⓐ Area: Automatic capacity control.

ⓑ When the temperature rises above Point A, the operation frequency is reduced at a specified rate.

ⓒ Area: Further frequency increase is prohibited.

ⓓ When the temperature falls below Point B, prevention of a rise in frequency is released and the air conditioner operates as in ⓐ area.

* The compressor will stop if the temperature of the compressor discharge exceeds 120°C due to shortage of gas or other reason.

■ Defrost detection and release

● **Reverse-Cycle Defrosting**

Defrosting Sequence

Heating operation

- Outdoor fan ON
- 4-way valve ON

Frost sensing

Defrost detection occurs in either of the following cases:

- The temperature of the heat exchanger remains at or below the L1 line for 3 minutes after the start of HEAT operation.
- The temperature of the heat exchanger remains at or below the L2 line for 120 minutes after the start of HEAT operation.

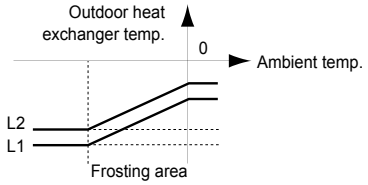

Reverse-cycle defrosting operation

- Compressor → 1 minute after it is stopped, compressor is ON.
- Outdoor fan → OFF
- Indoor fan → OFF
- 4-way valve → OFF
- Operation lamp → Repeatedly switches between red and orange illumination.

Releasing of defrosting

- Outdoor heating exchanger temp. is over 14°C.
- Defrosting operation lasts 12 minutes (maximum). 2 minutes after it is stopped, compressor is ON. 4-way valve is ON. Outdoor fan is ON.

NOTE

If the air conditioner is turned off during the defrosting cycle, it will continue defrosting and turn itself off after defrosting is completed.

■ CT (Peak current cut-off control)

- This function prevents the circuit breaker or fuse from operating to open the circuit. This function works when electrical current has increased due to an increase in the cooling / heating load, or to a decrease in the power supply voltage. In these cases, operation frequency is reduced or operation is interrupted automatically to control the electrical current for operation.
- When the cause of the increase in electrical current is rectified, the system will resume operation in the original mode.

SAP-KRV93, KRV123 (A)

	Cooling • Dry	Heating
Peak current cut-off trips	12.0	
Hz down	8.5	8.5

NOTE Electrical current setting for COOL operation is used during DEFROST operation.

10. TROUBLESHOOTING

■ Precautions before performing inspection or repair

- After checking the self-diagnostics monitor, turn the power OFF before starting inspection or repair.
- High-capacity electrolytic capacitors are used inside the outdoor unit controller (inverter). They retain an electrical charge (charging voltage DC 310 V) even after the power is turned OFF, and some time is required for the charge to dissipate. Be careful not to touch any electrified parts before the controller LED (red) turns OFF.

  If the outdoor controller is normal, approximately 30 seconds will be required for the charge to dissipate. However, allow at least 5 minutes for the charge to dissipate if there is thought to be any trouble with the outdoor controller.

< Clock display >

oP-1 Test run mode

oP-3 Self-diagnostics mode

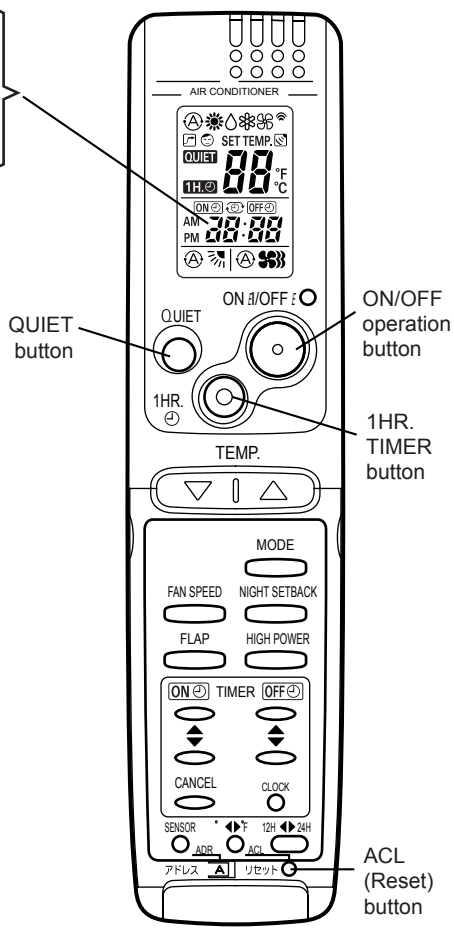

■ Method of self-diagnostics

Follow the procedure below to perform detailed trouble diagnostics.

NOTE

1: If the operation lamp blinks every 0.5 seconds immediately when the power is turned ON, there is an external ROM (OTP data) failure on the indoor circuit board, or a ROM socket insertion problem, or the ROM has not been installed.

2: The failure mode is stored in memory even when the power is not ON. Follow the procedure below to perform diagnostics.

Executing self-diagnostics

After turning on power to the air conditioner, use the remote controller and follow the steps below to execute self-diagnostics.

Step 1: Press and hold the remote controller QUIET button and 1 HR TIMER button. At the same time, press the ACL (reset) button. Use a pointed object such as the tip of a pen to press the ACL button.
When this has been done, “oP-1” (test run) appears, blinking, in the remote controller clock display area.

Step 2: Next, press the 1 HR TIMER button once to change the display from “oP-1” to “oP-3” (self-diagnostics). (The display continues to blink.)

Step 3: Finally press the ON/OFF button to engage self-diagnostics mode.

- The self-diagnostics function utilizes the 3 indicator lamps on the main unit, in combinations of ON lamps, blinking lamps, and OFF lamps, to report the existence of sensor trouble or a protective operation. (The lamps blink or remain ON for 5 seconds, then turn OFF for 2 seconds.) Self-diagnostics is completed when the buzzer sounds 3 short beeps.
- A maximum of 3 self-diagnostics reports are displayed, for 5 seconds each, beginning with the most recent report. Following this display the lamps turn OFF. In order to view the self-diagnostics results again, press the ON/OFF button again.
- The 3 lamps remain OFF if no trouble has occurred.

<IMPORTANT> After self-diagnostics is completed, be sure to press the ACL (reset) button to return to normal mode. The air conditioner will not operate if this is not done.

Self-diagnostics Lamps

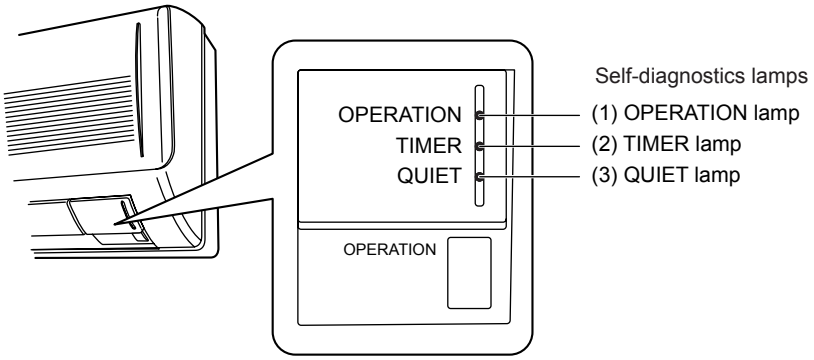

<NOTE> Since the indications cover various units, corresponding parts listed below may not be present in some models.

Indication on indoor unit				✕ ···· OFF ◐ ···· Blinking ☼ ···· ON (Illuminated)	
Quiet (3)	Timer (2)	Operation (1)	Code	Diagnostics item	Diagnostics contents
✕	✕	◐	S01	Room temperature sensor failure	① Sensor open circuit or short circuit ② Contact failure at connector or open circuit at terminal crimping location (short-circuit detection only for the humidity sensor) ③ Indoor/outdoor circuit board failure
✕	◐	✕	S02	Indoor heat exchanger sensor failure	
✕	◐	◐	S03	Humidity sensor failure	
◐	✕	✕	S04	Compressor temperature sensor failure	① Sensor open circuit or short circuit ② Contact failure at connector or open circuit at terminal crimping location ③ Outdoor circuit board failure
◐	✕	◐	S05	Outdoor heat exchanger sensor failure	
◐	◐	✕	S06	Outdoor air temperature sensor failure	
◐	◐	◐	S07	Outdoor electrical current detection failure	Outdoor circuit board failure
✕	✕	☼	E01	Indoor/outdoor communications failure (serial communications)	① Mis-wiring ② AC power failure ③ Blown fuse ④ Power relay failure ⑤ Indoor or outdoor circuit board failure
✕	☼	✕	E02	• HIC circuit failure • Power Tr (transistor) circuit failure	① HIC or power Tr failure ② Outdoor fan does not turn. ③ Instantaneous power outage ④ Service valve not opened. ⑤ Outdoor fan blocked. ⑥ Continuous overload operation ⑦ Compressor failure ⑧ Outdoor circuit board failure
✕	☼	☼	E03	Outdoor unit external ROM (OTP data) failure	① External ROM data failure ② Outdoor circuit board failure
☼	✕	✕	E04	Peak current cut-off	① Instantaneous power outage ② HIC or power transistor failure ③ Outdoor circuit board failure
☼	✕	☼	E05	• PAM circuit failure • Active circuit failure	① Outdoor circuit board failure ② Outdoor power supply voltage failure
☼	☼	✕	E06	Compressor discharge overheat prevention activated.	① Electric expansion valve failure ② Capillaries choked ③ Shortage of refrigerant ④ Continuous overload operation ⑤ Outdoor fan does not rotate ⑥ Outdoor circuit board failure
☼	☼	☼	E07	Indoor fan operating failure	① Fan motor failure ② Contact failure at connector ③ Indoor circuit board failure
◐	◐	☼	E08	• 4-way valve switching failure • Indoor zero-cross failure	① 4-way valve failure (heat pump model only) ② Outdoor circuit board failure
◐	☼	◐	E09	No-refrigerant protection	① Service valve not opened. ② Shortage of refrigerant
◐	☼	☼	E10	DC compressor drive circuit failure	① Open phase ② Outdoor circuit board failure
☼	◐	◐	E11	Outdoor fan operating failure	① Fan motor failure ② Contact failure at connector ③ Outdoor circuit board failure
☼	◐	☼	E12	• Outdoor system communications failure • Outdoor high-pressure SW • OLR operation • Outdoor power supply open phase • Outdoor coil freezing	① Mis-wiring ② Blown fuse ③ Power relay failure ④ Open phase ⑤ Outdoor circuit board failure ⑥ Compressor failure
☼	☼	◐	E13	Freeze-prevention operation activated.	① Indoor fan system failure ② Shortage of refrigerant ③ Low-temperature operation

■ If self-diagnostics function fails to operate

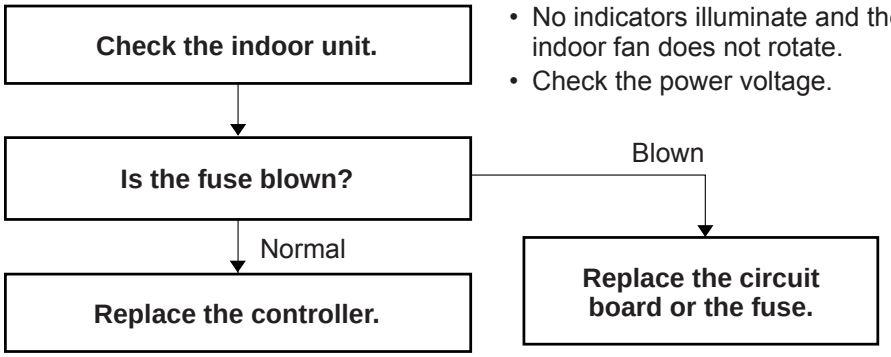

<Checking the indoor and outdoor units>

■ Checking the indoor unit

No.	Control	Check items (unit operation)
1	Use the remote controller to operate the unit in “TEST run” mode. To determine whether the mode is currently in “TEST run” mode, check the 3 indicator lamps on the unit. If all 3 are blinking, the current mode is “TEST run.”	• The rated voltage must be present between inter-unit cables 1 and 2. • Connect a 5 kΩ resistor between inter-unit cables 2 and 4. When the voltage at both ends is measured, approximately 12–15 V DC must be output and the multimeter pointer must bounce once every 8 seconds. Or instead of measuring the voltage, you can insert an LED jig and check that the LED flickers once every 8 seconds.

● For the “Test run” procedure, refer to 7.4 “How to Test Run the Air Conditioner.”
● If there are no problems with the above, then check the outdoor unit.

■ Checking the outdoor unit

No.	Control	Check items (unit operation)
1	Apply the rated voltage between outdoor unit terminals 1 and 2.	• The control panel LED (red) must illuminate.
2	Short-circuit the outdoor unit COM terminal to the T-RUN terminal.	• The compressor, fan motor, and 4-way valve must all turn ON.

● If there are no problems with the above, then check the indoor unit.

● **Using the TEST/T-RUN terminals**

T-RUN : Test run (compressor and fan motor turn ON).
TEST/MV : Compresses time to 1/60th (accelerates operation by 60 times faster than normal).

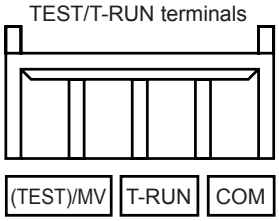

■ Checking serial communications

Initial self-diagnostics	→ Control 1 Short-circuit terminals 2 and 4 on the indoor unit terminal base.	→ Control 2 Short-circuit terminals 2 and 4 on the indoor unit terminal base.	Probable location of malfunction
(1) illuminates	No change	——	Indoor unit circuit board failure
	Change: (1) and (3) illuminate, and (2) blinks.	Change: (1) and (3) illuminate, and (2) blinks.	Outdoor unit circuit board failure
	Change: (1) and (3) illuminate, and (3) blinks.	Change: (1) illuminates	Failure (open circuit, contact failure, etc.) in the inter-unit wiring
(1) and (3) illuminate, and blinks.	——	——	Outdoor unit circuit board failure

● Turn the power OFF before performing short circuiting procedures.
● Refer to the previous pages when performing system self-diagnostics.
● So that the check can be made quickly, indicators blink at first communication after power ON.
● Before performing the above checks, perform “TEST run” operation, and check that the rated voltage is output to terminals 1 and 2 on the outdoor unit. If it is not output, there is a failure related to the indoor unit power.

<Trouble Diagnosis of Outdoor Fan Motor>.....Applied for only SAP-CRV123 outdoor unit

- This outdoor DC fan motor contains an internal control PCB. Therefore, it is not possible to measure the coil resistance, and the following procedure should be used to check the motor.
- To perform diagnosis, follow the instructions in “Checking the Outdoor Unit” on the previous page and set the outdoor unit to Test Run mode (compressor ON, outdoor fan motor ON).

Important: (A) Turn OFF the power before connecting or disconnecting the motor connectors.

(B) When performing voltage measurement at the outdoor controller connector for (3) in the table below, the DC motor will trip and voltage output will stop approximately 10 seconds after operation is started. For this reason, to measure the voltage again, first turn OFF the outdoor unit power, then follow the instructions in “Checking the Outdoor Unit” and again set the unit to Test Run mode.

[Trouble symptom 1] The fan does not stop when the outdoor unit stops. → Outdoor unit controller trouble

[Trouble symptom 2] The fan motor does not rotate when the outdoor unit is operating.

(Diagnostic procedure)

* Disconnect the motor connectors and measure the voltage at the DC motor connectors on the outdoor unit controller (3 locations).

Measurement location	Normal value
(1) Vs-Gnd: Between pin 1 and pin 4	DC 230 V or more
(2) Vcc-Gnd: Between pin 5 and pin 4	DC 14 V or more
(3) Vsp-Gnd: Between pin 7 and pin 4	After fluctuating 4 times between DC 1.0 – 4.3 V (1 sec. ON) and DC 0 V (1 sec. OFF), the DC motor trips.

(Diagnostic results)

All of the above measured values are normal. → Fan motor trouble (Replace the motor.)

Any one of the above measured values is not normal. → Outdoor unit controller trouble (Replace the controller .)

(Reference) DC motor connector pin arrangement

Pin 1: Vs (white)
Pin 2: Not used
Pin 3: Not used
Pin 4: Gnd (black)
Pin 5: Vcc (red)
Pin 6: FG (blue)
Pin 7: Vsp (yellow)

[Trouble symptom 3] Motor rotates for some time (several seconds), but then quickly stops, when the outdoor unit operates.
(There is trouble in the system that provides feedback of motor rotation speed from the motor to the outdoor unit controller.)

[Trouble symptom 4] Fan motor rotation speed does not change during outdoor unit operation.

[Trouble symptom 5] Fan motor rotation speed varies excessively during outdoor unit operation.

(Remedy for symptom 3 to 5)

It is not possible to identify whether the trouble is outdoor unit controller trouble or motor trouble.
Therefore, first replace the outdoor unit controller, then (if necessary) replace the DC motor.

<Noise malfunction and electromagnetic interference>

An inverter A/C operates using pulse signal control and high frequencies. Therefore, it is susceptible to the effects of external noise, and is likely to cause electromagnetic interference with nearby wireless devices.

A noise filter is installed for ordinary use, preventing these problems. However, depending on the installation conditions, these effects may still occur. Please pay attention to the points listed below.

■ Noise malfunction

This refers to the application of high-frequency noise to the signal wires, resulting in abnormal signal pulses and malfunction.

Locations most susceptible to noise	Trouble	Correction
1. Locations near broadcast stations where there are strong electromagnetic waves 2. Locations near amateur radio (short wave) stations 3. Locations near electronic sewing machines and arc-welding machines	Either of the following trouble may occur. 1. The unit may stop suddenly during operation. 2. Indicator lamps may flicker.	(The fundamental concept is to make the system less susceptible to noise.) — Insulate for noise or distance from the noise source. — 1. Use shielded wires. 2. Move unit away from the noise source.

■ Electromagnetic interference

This refers to noise generated by high-speed switching of the microcomputer and compressor. This noise radiates through space and returns to the electric wiring, affecting any wireless devices (televisions, radios, etc.) located nearby.

Locations most susceptible to noise	Trouble	Correction
1. A television or radio is located near the A/C and A/C wiring. 2. The antenna cable for a television or radio is located close to the A/C and A/C wiring. 3. Locations where television and radio signals are weak.	1. Noise appears in the television picture, or the picture is distorted. 2. Static occurs in the radio sound.	1. Select a separate power source. 2. Keep the A/C and A/C wiring at least 1 meter away from wireless devices and antenna cables. 3. Change the wireless device's antenna to a high-sensitivity antenna. 4. Change the antenna cable to a BS coaxial cable. 5. Use a noise filter (for the wireless device). 6. Use a signal booster.

11. CHECKING ELECTRICAL COMPONENTS

11-1. Measurement of Insulation Resistance

- The insulation is in good condition if the resistance exceeds 1MΩ.

11-1-1. Power supply cord

Clamp the grounding wire of power cord with the lead clip of the insulation resistance tester and measure the resistance by placing a probe on either of the two power wires. (Fig. 1)

Then also measure the resistance between the grounding and other power terminals. (Fig. 1)

11-1-2. Indoor unit

Clamp an aluminum plate fin or copper tube with the lead clip of the insulation resistance tester and measure the resistance by placing a probe on each terminal screw where power supply lines are connected on the terminal plate. (Fig. 2)

11-1-3. Outdoor unit

Clamp an aluminum plate fin or copper tube with the lead clip of the insulation resistance tester and measure the resistance by placing a probe on each terminal screw on the terminal plate. (Fig. 2)

Note that the ground line terminal should be skipped for the check.

11-1-4. Measurement of insulation resistance for electrical parts

Disconnect the lead wires of the desired electric part from terminal plate, capacitor, etc. Similarly disconnect the connector. Then measure the insulation resistance. (Figs. 3 and 4)

NOTE

Refer to Electric Wiring Diagram.

If the probe cannot enter the poles because the hole is too narrow then use a probe with a thinner pin.

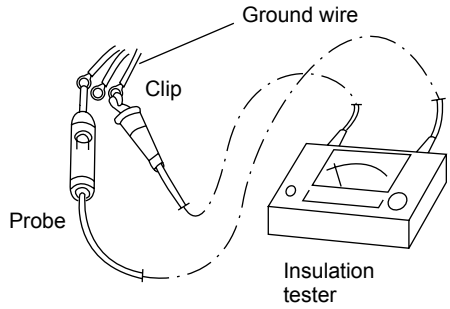

Fig. 1

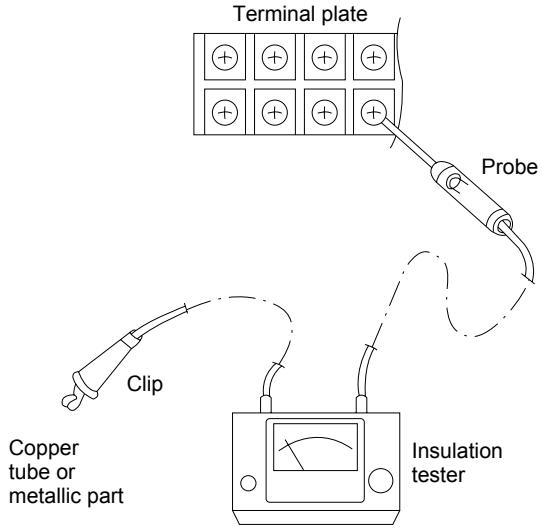

Fig. 2

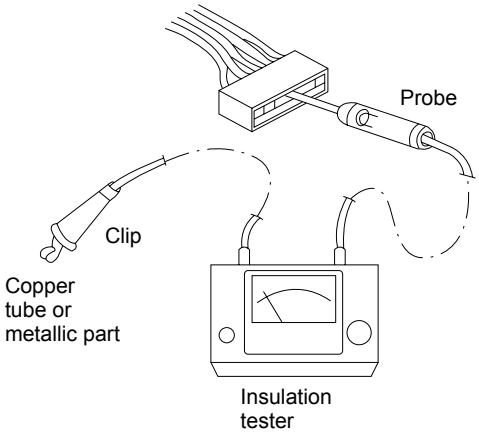

Fig. 3

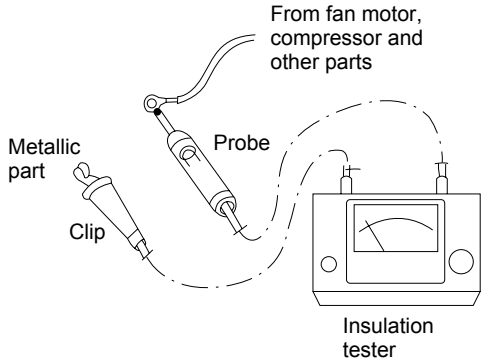

Fig. 4

11-2. Checking Continuity of Fuse on PCB Ass'y

- Remove the PCB Ass'y from the electrical component box. Then pull out the fuse from the PCB Ass'y. (Fig. 5)
- Check for continuity using a multimeter as shown in Fig. 6.

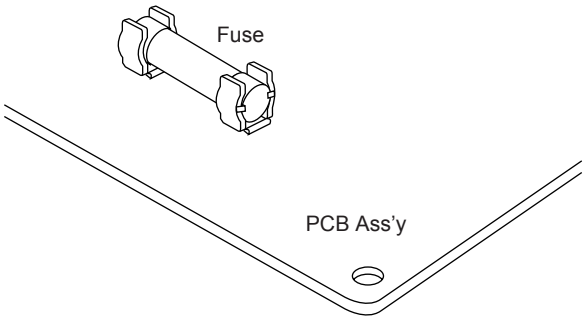

Fig. 5

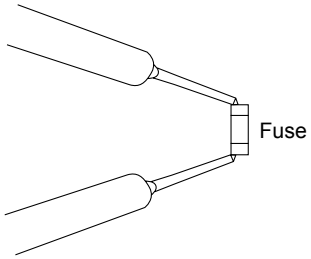

Fig. 6

12. REFRIGERANT R410A: SPECIAL PRECAUTIONS WHEN SERVICING UNIT

12-1. Characteristics of New Refrigerant R410A

12-1-1. What is New Refrigerant R410A?

R410A is a new refrigerant that contains two types of pseudo-non-azeotropic refrigerant mixture. Its refrigeration capacity and energy efficiency are about the same level as the conventional refrigerant, R22.

12-1-2. Components (mixing proportions)

HFC32 (50%) / HFC125 (50%)

12-1-3. Characteristics

- Less toxic, more chemically stable refrigerant
- The composition of refrigerant R410A changes whether it is in a gaseous phase or liquid phase. Thus, when there is a refrigerant leak the basic performance of the air conditioner may be degraded because of a change in composition of the remaining refrigerant. ***Therefore, do not add new refrigerant.*** Instead, recover the remaining refrigerant with the refrigerant recovery unit. Then, after evacuation, totally recharge the specified amount of refrigerant with the new refrigerant at its normal mixed composition state (in liquid phase).
- When refrigerant R410A is used, the composition will differ depending on whether it is in gaseous or liquid phase, and the basic performance of the air conditioner will be degraded if it is charged while the refrigerant is in gaseous state. ***Thus, always charge the refrigerant while it is in liquid phase.***

CAUTION

Ether-type oil is used for compressor oil for R410A-type units, which is different from the mineral oil used for R22. Thus more attention to moisture prevention and faster replacement work compared with conventional models are required.

12-2. Checklist Before Servicing

Use a clutch-type flare tool for R410A or the conventional flare tool. Note that sizes of the resultant flares differ between these two tools. Where a conventional flare tool is used, make sure to observe A Specification (amount of extrusion) by using the flare spacer.

Diameter of tube (ø) D	A Specification	
	Flare tool for R410A	Conventional flare tool (for R22)
ø6.35 (1/4")	0 – 0.5 mm	1.0 – 1.5 mm
ø9.52 (3/8")	0 – 0.5 mm	1.0 – 1.5 mm

- **Size of flare**

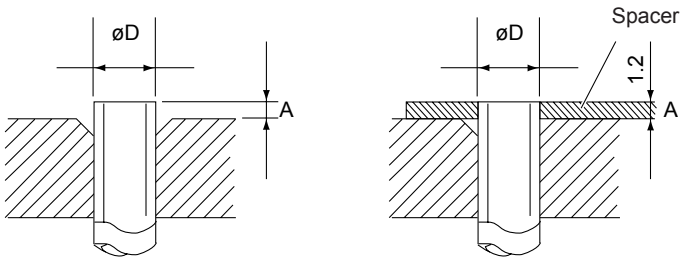

Flare tool for R410A Conventional flare tool (R22)

- **Tubing precautions**

  Refrigerant R410A is more easily affected by dust or moisture compared with R22, thus be sure to temporarily cover the ends of the tubing with caps or tape prior to installation.

  Never use 0.7mm-thick copper tubing or tubing which is less than 0.8mm in thickness, since air conditioners with R410A are subject to higher pressure than those using R22 and R407C.

- **No addition of compressor oil for R410A**

  No additional charge of compressor oil is permitted.

- **No use of refrigerant other than R410A**

  Never use a refrigerant other than R410A.

- **If refrigerant R410A is exposed to fire**

  Through welding, etc., toxic gas may be released when R410A refrigerant is exposed to fire. Therefore, be sure to provide ample ventilation during installation work.

- **Caution in case of R410A leak**

  Check for possible leak points with the special leak detector for R410A. If a leak occurs inside the room, immediately provide thorough ventilation.

12-3. Tools Specifically for R410A

- **For servicing, use the following tools for R410A**

Tool Distinction	Tool Name
Tools specifically for R410A	● Gauge manifold ● Charging hose ● Gas leak detector ● Refrigerant cylinder ● Charging cylinder ● Refrigerant recovery unit ● Vacuum pump with anti-reverse flow (***1**) (Solenoid valve-installed type, which prevents oil from flowing back into the unit when the power is off, is recommended.) ● Vacuum pump (***2**) … can be used if the following adapter is attached. ● Vacuum pump adapter (reverse-flow prevention adapter) (***3**). (Solenoid valve-installed adapter attached to a conventional vacuum pump.) ● Electronic scale for charging refrigerant ● Flare tool
Tools which can be commonly used for R22, R407C, and R410A	● Bender ● Torque wrench ● Cutter, reamer ● Welding machine, nitrogen gas cylinder

CAUTION

- **The above tools specifically for R410A must not be used for R22 and R407C. Doing so will cause malfunction of the unit.**
- **For the above vacuum pump (*1, *2) and vacuum pump adapter (*3), those for R22-type units can be used for R407C-type. However, they must be used exclusively for R410A and never alternately with R22 and R407C.**

- To prevent other refrigerants (R22, R407C) from being mistakenly charged to this unit, sizes of the service ports and flare nuts of the narrow tube service valve and wide tube service valve have been altered.

12-4. Tubing Installation Procedures

When the tubes are connected, ***always apply HAB oil on the flare portions to improve the sealing of tubing.***

The following is the **HAB oil** generally used:

Esso: ZERICE S32

NOTE For details on tubing installation procedures, refer to the installation manuals attached to the indoor unit and outdoor unit.

12-5. In Case of Compressor Malfunction

CAUTION

- **Should the compressor malfunction, be sure to make the switch to a replacement compressor as quickly as possible.**
- **Use only the tools indicated exclusively for R410A. → See "12-3. Tools Specifically for R410A."**

12-5-1. Procedure for replacing compressor

(1) Recovering refrigerant

- Any remaining refrigerant inside the unit should not be released to the atmosphere, but recovered using the refrigerant recovery unit for R410A.
- Do not reuse the recovered refrigerant, since it will contain impurities.

(2) Replacing Compressor

- Soon after removing seals of both discharge and suction tubes of the new compressor, replace it quickly.

(3) Checking for sealing

- Use nitrogen gas for the pressurized gas, and never use a refrigerant other than R410A. Also do not use oxygen or any flammable gas.

(4) Evacuation

- ***Use a solenoid valve-installed vacuum pump*** so that even if power is cut off in the middle of evacuation of air due to a power interruption, the valve will prevent the pump oil from flowing back.
- The equipment may be damaged if moisture remains in the tubing, thus carry out the evacuation thoroughly.
- When using a vacuum pump with exhaust air volume more than 25L/min. and ultimate vacuum pressure rate of 0.05Torr:

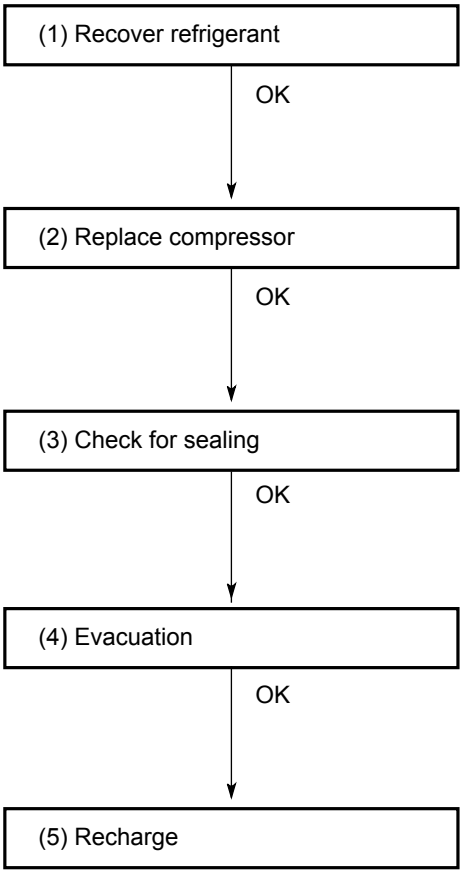

Standard time for evacuation

Length of tubing	Less than 10 meters	More than 10 meters
Time	More than 10 minutes	More than 15 minutes

(5) Recharging

- ***Be sure to charge the specified amount of refrigerant in liquid state*** using the service port of the wide tube service valve. The proper amount is listed on the unit's nameplate.

  When the entire amount cannot be charged all at once, charge gradually while operating the unit in Cooling Operation.

CAUTION

Never charge a large amount of liquid refrigerant at once to the unit. This may cause damage to the compressor.

- When charging with a refrigerant cylinder, use an electronic scale for charging refrigerant. In this case, if the volume of refrigerant in the cylinder becomes less than 20% of the fully-charged amount, the composition of the refrigerant starts to change. Thus, ***do not use the refrigerant if the amount in the charging cylinder is less than 20%.***

  Also, charge the minimum necessary amount to the charging cylinder before using it to charge the air conditioning unit.

Example:

In case of charging refrigerant to a unit requiring 0.76Kg using a capacity of a 10Kg cylinder, the minimum necessary amount for the cylinder is:

$$0.76 + 10 \times 0.20 = 2.76\text{Kg}$$

For the remaining refrigerant, refer to the instructions of the refrigerant manufacturer.

- If using a charging cylinder, transfer the specified amount of liquid refrigerant from the refrigerant cylinder to the charging cylinder.

  Prepare an evacuated charging cylinder beforehand.

CAUTION

- **To prevent the composition of R410A from changing, never bleed the refrigerant gas into the atmosphere while transferring the refrigerant. (Fig. 3)**

Do not use the refrigerant if the amount in the charging cylinder is less than 20%.

Configuration and characteristics of cylinders

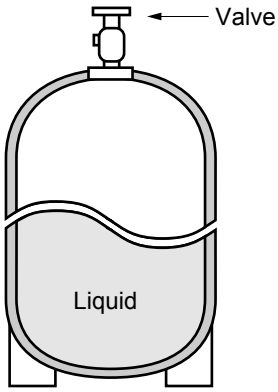

Single valve
Charge liquid refrigerant with cylinder in up-side-down position.

Fig. 1

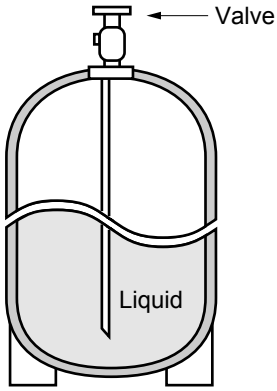

Single valve (with siphon tube)
Charge with cylinder in normal position.

Fig. 2

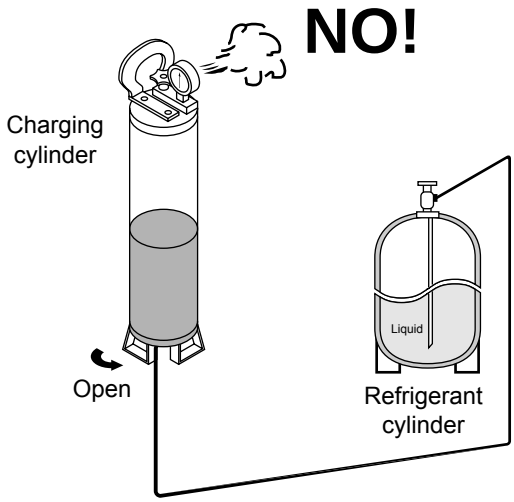

Fig. 3

12-6. In Case Refrigerant is Leaking

CAUTION **Never attempt to charge additional refrigerant when refrigerant has been leaking from the unit. Follow the procedure described below to locate points of leaks and carry out repairs, then recharge the refrigerant.**

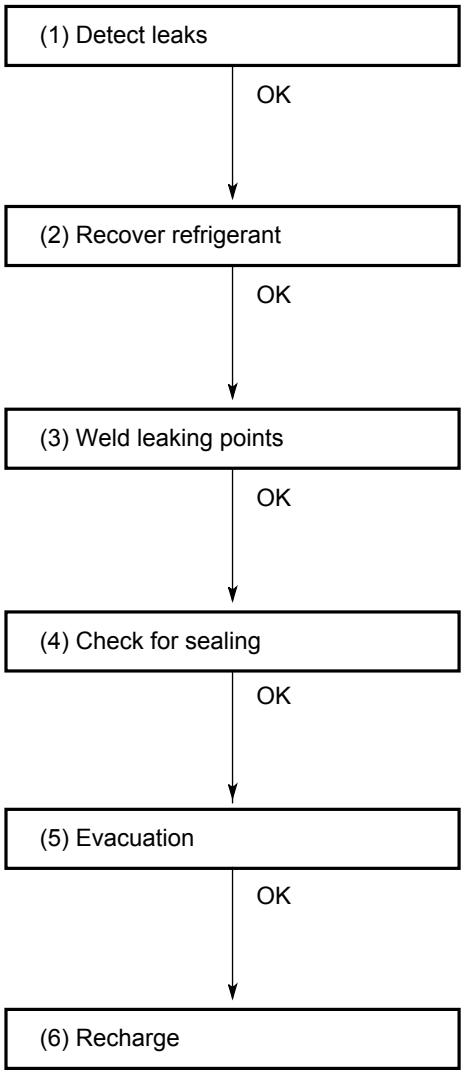

(1) Detecting Leaks

- Use the detector for R410A to locate refrigerant leak points.

(2) Recovering refrigerant

- Never release the gas to the atmosphere; recover residual refrigerant using the refrigerant recovery unit for R410A, instead.
- Do not reuse the recovered refrigerant because its composition will have been altered.

(3) Welding leaking points

- Confirm again that no residual refrigerant exists in the unit before starting welding.
- Weld securely using flux and wax for R410A.
- Prevent oxide film from forming inside the tubes utilizing substitution with nitrogen (N2) in the refrigerant circuit of the unit. Leave ends of tubes open during welding.

(4) Checking for sealing

- Use nitrogen gas for the pressurized gas, and never use a refrigerant other than R410A. Also do not use oxygen or any flammable gas.

(5) Evacuation

- ***Use a solenoid valve-installed vacuum pump*** so that even if power is cut off in the middle of evacuation of air due to a power interruption, the valve will prevent the pump oil from flowing back.
- The equipment may be damaged if moisture remains in the tubing, thus carry out the evacuation thoroughly.
- When using a vacuum pump with exhaust air volume more than 25L/min. and ultimate vacuum pressure rate of 0.05Torr:

Standard time for evacuation

Length of tubing	Less than 10 m	More than 10 m
Time	More than 10 minutes	More than 15 minutes

(6) Recharging

- Recharge unit in the same manner explained on the previous page “(5) Recharging.”

12-7. Charging Additional Refrigerant

12-7-1. When Tubes are Extended

- Observe the proper amount of refrigerant as stated in this service manual or the installation manual that came with the indoor unit. ***Charge additional refrigerant in liquid state only.***

CAUTION

Never charge additional refrigerant if refrigerant is leaking from the unit. Follow instructions given in "12-6. In Case Refrigerant is Leaking" and completely carry out repairs. Only then should you recharge the refrigerant.

12-8. Retro-Fitting Existing Systems

12-8-1. Use of Existing Units

- ***Never use new refrigerant R410A for existing units which use R22.*** This will cause the air conditioner to operate improperly and may result in a hazardous condition.

12-8-2. Use of Existing Tubing

- If replacing an older unit that used refrigerant R22 with a R410A unit, ***do not use its existing tubing.*** Instead, completely new tubing must be used.

APPENDIX INSTRUCTION MANUAL

SAP-KRV93EH + SAP-CRV93EH
SAP-KRV123EH + SAP-CRV123EH

(OI-852-6-4180-671-00-0)

Features

This air conditioner is an inverter type unit that automatically adjusts capacity as appropriate. Details on these functions are provided below; refer to these descriptions when using the air conditioner.

- **Microprocessor Controlled Operation**
  The interior compartment of the remote control unit contains several features to facilitate automatic operation, easy logically displayed for easy use.

- **Simple One-touch Wireless Remote Control**
  The remote control unit has several features to facilitate automatic operation.

- **24-Hour ON or OFF Timer**
  This timer can be set to automatically turn the unit on or off at any time within a 24 hour period.

- **1-Hour OFF Timer**
  This timer can be set to automatically turn off the unit at any time after one hour.

- **Night Setback**
  Pressing this button changes the setting of the room temperature thermostat, allowing you to set the temperature at whatever level that you find comfortable.

- **Automatic and 3-step Fan Speed**
  Auto/High/Medium/Low

- **Air Sweep Control**
  This function moves a flap up and down in the air outlet, directing air in a sweeping motion around the room and providing comfort in every corner.

- **Auto. Flap Control**
  This automatically sets the flap to the optimum position during heating, cooling, and drying operation.

- **Automatic Switching between Cooling and Heating**
  This unit automatically switches between cooling operation and heating operation according to the difference between the room temperature and the temperature setting.

- **Hot Start Heating System**
  Right from the start, the air is warm and comfortable. This system prevents any cold blasts at the beginning while the heat pump is warming up, or even defrosting.

- **Automatic Restart Function for Power Failure**
  Even when power failure occurs, preset programmed operation can be reactivated once power resumes.

- **High Power Operation**
  If not in Auto Operation, the unit operates at maximum output for 30 minutes, regardless of the desired temperature.
  The fan speed is 1 step above “High”.

- **Quiet Operation**
  The fan rotates slower than the fan speed setting to provide a quieter operating sound.

- **Anti-Mold Filter**
  This unit is equipped with an anti-mold filter that inhibits the growth of mold and bacteria.

- **Air Clean Filter**
  An air filter that eliminates unpleasant odors and cleans the air is available.

Contents

Page

Features 2
Product Information 3
Alert Symbols 3
Installation Location 4
Electrical Requirements 4
Safety Instructions 4
Names of Parts 5
Using the Remote Control Unit 10
Operation with the Remote Control Unit 12
1. Automatic Operation 12
2. Manual Operation 13
3. Adjusting the Fan Speed 14
4. Fan Only 14
5. Night Setback Mode 15
6. QUIET Mode 16
7. HIGH POWER Mode 16
Special Remarks 17
Setting the Timer 18
Using the 1-Hour OFF Timer 20
Tips for Energy Saving 20
Adjusting the Airflow Direction 21
Operation without the Remote Control Unit 22
Care and Cleaning 22
Troubleshooting 25
Operating Range 25

EG

Product Information

If you have problems or questions concerning your Air Conditioner, you will need the following information. Model and serial numbers are on the nameplate on the bottom of the cabinet.

Model No. _____ Serial No. _____

Date of purchase _____

Dealer's address _____

Phone number _____

DECLARATION OF CONFORMITY

This product is marked « CE » as it satisfies EEC Directive No. 89/336/ EEC, 73/23/EEC, 93/68/EEC and 92/31/EEC.

This declaration will become void in case of mis-usage and/or from non observance though partial of Manufacturer's installation and/or operating instructions.

Alert Symbols

The following symbols used in this manual, alert you to potentially dangerous conditions to users, service personnel or the appliance:

This symbol refers to a hazard or unsafe practice which can result in severe personal injury or death.

This symbol refers to a hazard or unsafe practice which can result in personal injury or product or property damage.

Installation Location

- **We recommend that this air conditioner be installed properly by qualified installation technicians in accordance with the Installation Instructions provided with the unit.**
- Before installation, check that the voltage of the electric supply in your home or office is the same as the voltage shown on the nameplate.

WARNING

- **Do not install this air conditioner where there are fumes or flammable gases, or in an extremely humid space such as a greenhouse.**
- **Do not install the air conditioner where excessively high heat-generating objects are placed.**

Avoid: To protect the air conditioner from heavy corrosion, avoid installing the outdoor unit where salty sea water can splash directly onto it or in sulphurous air near a spa.

Electrical Requirements

1. All wiring must conform to the local electrical codes. Consult your dealer or a qualified electrician for details.
2. Each unit must be properly grounded with a ground (or earth) wire or through the supply wiring.
3. Wiring must be done by a qualified electrician.

Safety Instructions

- **Read this Instruction Manual carefully before using this air conditioner. If you still have any difficulties or problems, consult your dealer for help.**
- **This air conditioner is designed to give you comfortable room conditions. Use this only for its intended purpose as described in this Instruction Manual.**

WARNING

- **Never use or store gasoline or other flammable vapor or liquid near the air conditioner — it is very dangerous.**
- **This air conditioner has no ventilator for intaking fresh air from outdoors. You must open doors or windows frequently when you use gas or oil heating appliances in the same room, which consume a lot of oxygen from the air. Otherwise there is a risk of suffocation in an extreme case.**

CAUTION

- **Do not turn the air conditioner on and off from the power mains switch. Use the ON/OFF operation button.**
- **Do not stick anything into the air outlet of the outdoor unit. This is dangerous because the fan is rotating at high speed.**
- **Do not let children play with the air conditioner.**
- **Do not cool or heat the room too much if babies or invalids are present.**

Names of Parts

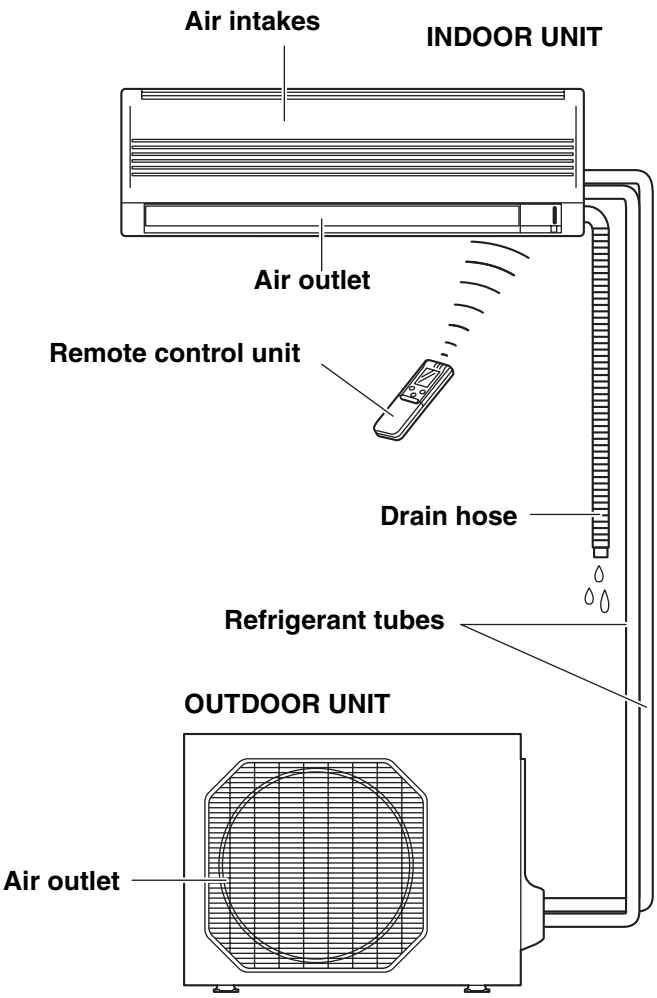

NOTE This illustration is based on the external view of a standard model. Consequently, the shape may differ from that of the air conditioner which you have selected.

This air conditioner consists of an indoor unit and an outdoor unit. You can control the air conditioner with the remote control unit.

Air Intake	Air from the room is drawn into this section and passes through air filters which remove dust.
Air Outlet	Conditioned air is blown out of the air conditioner through the air outlet.
Remote Control Unit	The wireless remote control unit controls power ON/OFF, operation mode selection, temperature, fan speed, timer setting, and air sweeping.
Refrigerant Tubes	The indoor and outdoor units are connected by copper tubes through which refrigerant gas flows.
Drain Hose	Moisture in the room condenses and drains off through this hose.
Outdoor (Condensing) Unit	The outdoor unit contains the compressor, fan motor, heat exchanger coil, and other electrical components.

Unit Display and Operation Button

IMPORTANT

Avoid using radio equipment such as mobile phone near (within 1 m) the remote control receiver. Some radio equipment may cause malfunction of the unit.

If the trouble happens, disconnect power and restart the air conditioner after a few minutes.

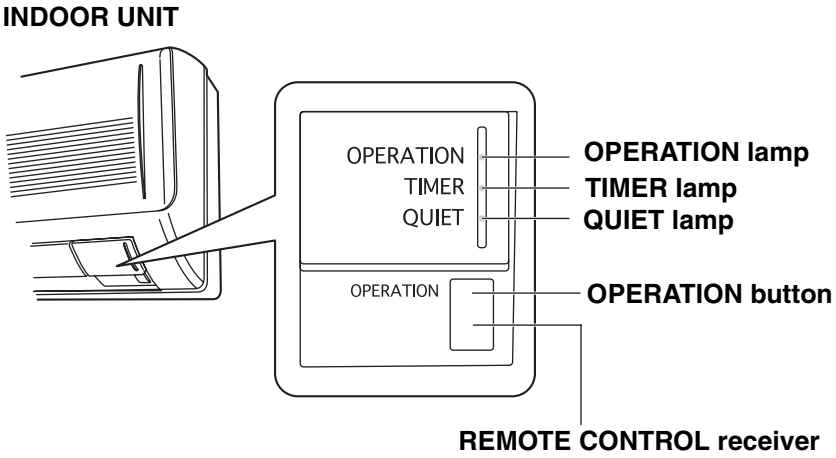

REMOTE CONTROL receiver	This section picks up infrared signals from the remote control unit (transmitter).
OPERATION button	When the remote control cannot be used, pressing this button enables heating and cooling operation. Each time this button is pressed, the type of operation conducted is indicated by the changing color of the OPERATION lamp. Press the button and select the lamp color that suits your preference for operation. Cooling operation (green) → Heating operation (red) → Stop (lamp off)
OPERATION lamp	This lamp lights when the system is in the continuous AUTO (red or green), HEAT (red), DRY (orange), COOL (green) and FAN (green) mode. The OPERATION lamp lights up red and orange alternately when the system is defrosting.
TIMER lamp	This lamp lights when the system is being controlled by the timer.
QUIET lamp	This lamp lights during operation in the QUIET mode.

NOTE The unit's display lamps are dimmed during operation in the NIGHT SETBACK mode.

Remote Control Unit (Display)

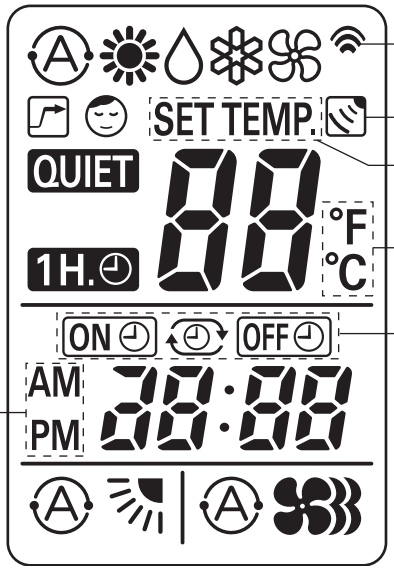

Displayed when transmitting data

Displayed when indoor unit sensor is in use

Displayed when setting temperature

Displayed when temperature is shown

Displayed when setting timer

Displayed when the time display is set to 12-hour time.

EG

Symbols

(1) Operation mode

AUTO .....

HEAT .....

MILD DRY .....

COOL .....

FAN .....

(2) Fan speed

Automatic operation .....

HIGH .....

MEDIUM.....

LOW .....

(3) Temperature setting
16 – 30 °C
When set to 28 °C
temperature indication.....

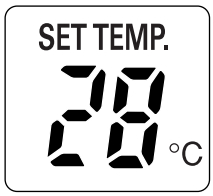

(4) Timer
24-hour clock with ON/OFF program Timer.....

ON Timer.....

OFF Timer.....

1-hour OFF Timer.....

(5) NIGHT SETBACK .....

(6) Confirmation of transmission..

(7) Auto. flap indication .....

Flap angle indication .....

Sweep indication .....

(8) High power operation .....

(9) Quiet operation.....

Remote Control Unit

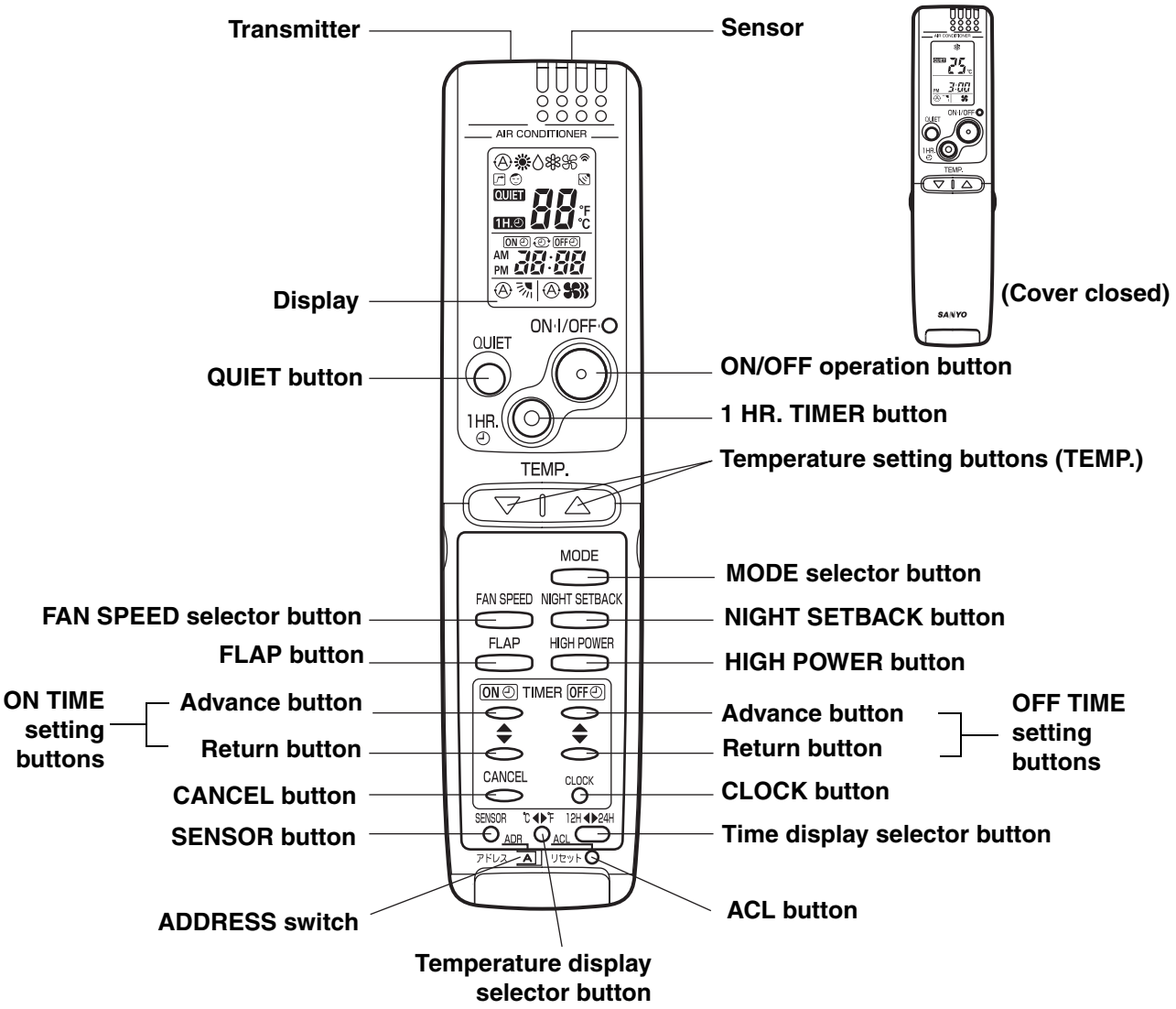

NOTE The illustration above pictures the remote control unit after the cover has been opened.

Transmitter	When you press the buttons on the remote control unit, the mark appears in the display to transmit the setting changes to the receiver in the air conditioner.
Sensor	A temperature sensor inside the remote control unit senses the room temperature.
Display	Information on the operating conditions is displayed while the remote control unit is switched on. If the unit is turned off, FLAP setting and FAN SPEED setting are not displayed.
QUIET button	QUIET : When you press this button, the fan rotates slower than the fan speed setting to provide a quieter operating sound.
ON/OFF operation button	This button is for turning the air conditioner on and off.
1 HR. TIMER button (1-HOUR OFF TIMER)	1H. : When you press this button, regardless of whether the unit is operating or stopping, the unit operates for one hour and then shuts down.

Remote Control Unit (continued)

Temperature setting buttons (TEMP.)	Press the ▲ button to increase the set temperature. Press the ▼ button to reduce the set temperature. For details, see Automatic operation and Manual operation.
MODE selector button	Use this button to select AUTO, HEAT, DRY, COOL or FAN mode.
(AUTO)	Ⓐ : When this setting is selected, the air conditioner calculates the difference between the thermostat setting and the room temperature and automatically switches to the “COOL” or “HEAT” mode as appropriate.
(HEAT)	☀ : The air conditioner makes the room warmer.
(DRY)	💧 : The air conditioner reduces the humidity in the room.
(COOL)	❄ : The air conditioner makes the room cooler.
(FAN)	: The air conditioner works only as a circulation fan.
FAN SPEED selector button	Ⓐ : The air conditioner automatically decides the fan speeds. : High fan speed : Medium fan speed : Low fan speed
NIGHT SETBACK button	For details, see “5. Night Setback Mode”. When you press this button in the HEAT, DRY or COOL mode, the mark appears in the display, and the remote control unit will automatically adjust the set temperature to save energy.
FLAP button	Press this button either to select the setting of the airflow direction to the auto. flap in each mode or one of the six possible positions manually or to select the sweep function which moves the flap up and down automatically. Ⓐ : Auto flap setting: If selected in a heating operation, the flap is set to position (3) in the following chart. If selected in a cooling or dry operation, the flap is set at position (7) in the following chart. : The airflow direction can be set manually. (six positions) : The flap moves up and down automatically.
NOTE	When you press the FLAP button, the air flow direction will be changed one by one as follows. 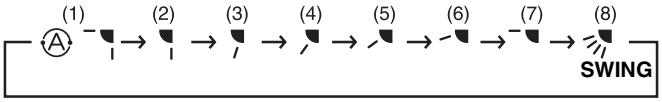
HIGH POWER button	: If this button is pressed during HEAT, DRY, COOL or FAN operation, the unit operates at maximum output for 30 minutes, regardless of the desired temperature. The fan speed is 1 step above “High”.
ON TIME/OFF TIME setting buttons	No display: The timer does not operate. ON : The air conditioner starts at the set time. OFF : The air conditioner stops at the set time. ON OFF : The air conditioner stops and starts, or starts and stops, at the set times every day. For details, see “Setting the Timer”.

EG

Remote Control Unit (continued)

SENSOR button	When you press this button (use a small-tipped object such as a ballpoint pen), the ⊘ mark will appear at the display. And the room temperature is detected by the sensor which is built into the indoor unit and the air conditioner is controlled accordingly.
NOTE	If the remote control is located near a heat source, such as a space heater or in direct sunlight, press the SENSOR button to switch to the sensor on the indoor unit.
Temperature Display Selector button	This switches the temperature display between °C and °F.
Time Display Selector button	This switches the time display between 24-hour time and 12-hour time.
ACL button (ALL CLEAR)	Puts the remote control unit into pre-operation status. Always press this button after replacing the batteries.
ADDRESS switch	• The address switch changes to prevent mixing of signals from remote control units when two air conditioners are installed next to each other. Normally, the address switch is set to A. For more information, please contact the dealer where you made the purchase. • Normally, the tabs on the remote control unit should not be bent.

NOTE The remote control unit sends the temperature signal to the air conditioner regularly at five minute intervals. If the signal from the remote control unit stops for more than 15 minutes due to the loss of the remote control unit or other trouble, the air conditioner will switch to the temperature sensor which is built into the indoor unit and control the room temperature. In these cases, the temperature around the remote control unit may differ from the temperature detected at the air conditioner's position.

Using the Remote Control Unit

How to Install Batteries

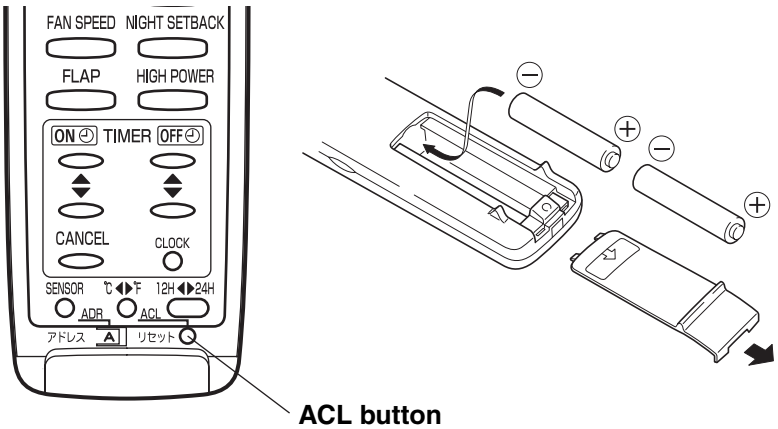

1. Slide the cover in the direction indicated by the arrow and remove it.
2. Install two AAA alkaline batteries. Make sure the batteries point in the direction marked in the battery compartment.
3. Use a thin object such as the tip of a pen to press the ACL button.

NOTE

- **The batteries last about six months, depending on how much you use the remote control unit. Replace the batteries when the remote control unit's display fails to light, or when the remote control cannot be used to change the air conditioner's settings.**
- **Use two fresh leak-proof type-AAA alkaline batteries.**
- **In replacing batteries, follow the instructions as mentioned in the sub-section "How to Install Batteries".**
- **If you do not use the remote control unit more than 1 month, take out the batteries.**

Using the Remote Control Unit (continued)

How to Use the Remote Control Unit

When using the remote control unit, always point the unit's transmitter head directly at the air conditioner's receiver.

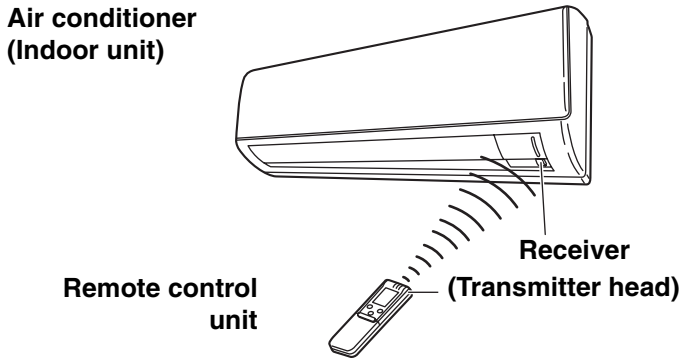

Remote Control Unit Installation Position

The remote control unit may be operated either from a non-fixed position or from a wall-mounted position. To ensure that the air conditioner operates correctly, DO NOT install the remote control unit in the following places:

DO NOT

- In direct sunlight
- Behind a curtain or other places where it is covered
- More than 8 m away from the air conditioner
- In the path of the air conditioner's airstream
- Where it may become extremely hot or cold
- Where it may be subject to electrical or magnetic noise
- Where there is an obstacle between the remote control unit and air conditioner (since a check signal is sent from the remote control unit every 5 minutes)

Mounting the Remote Control Unit

Before mounting the remote control unit, press the ON/OFF operation button at the mounting location to make sure that the air conditioner operates from that location. The indoor unit should make a beeping sound to indicate that it has received the signal.

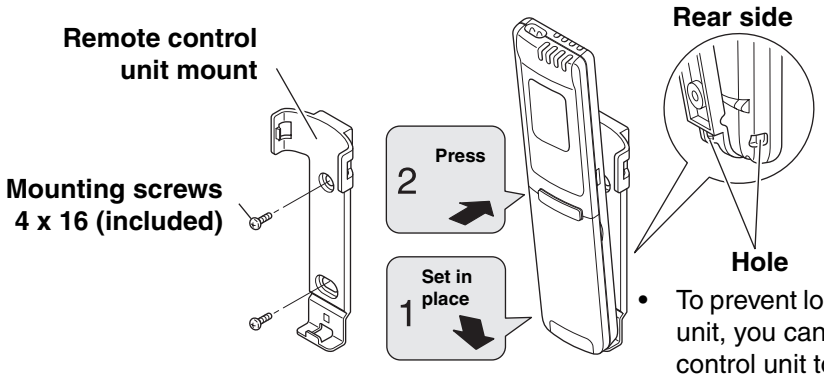

- To prevent loss of the remote control unit, you can connect the remote control unit to the mount by passing a string through the remote control unit and attachment hole.

To take out the remote control unit, pull it forward.

When Holding the Remote Control Unit

- When using the remote control unit and during air conditioner operation, the transmitter on the remote control unit should be pointed toward the receiver on the indoor unit.
- Make sure that there are no objects between the remote control unit and receiver which could block the signal.

Operation with the Remote Control Unit

1. Automatic Operation

This unit automatically switches between cooling operation and heating operation according to the difference between the room temperature and the temperature setting.

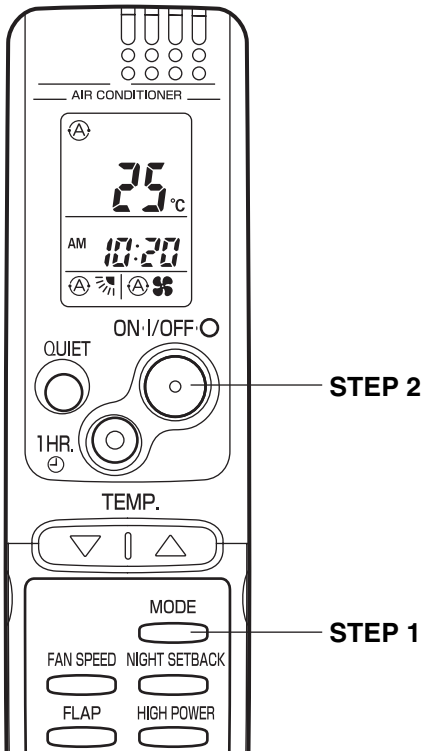

NOTE Check that the circuit breaker on the power panel is turned on.

Once Ⓐ mode is selected and the unit is preset by following the steps below, you can have the air conditioner automatically bring the room to the desired temperature simply by pressing the ON/OFF operation button.

STEP 1	Press the MODE selector button to Ⓐ.
STEP 2	Press the ON/OFF operation button.

To stop the air conditioner, press the ON/OFF operation button again.

NOTE

- To change the temperature setting; press the temperature setting buttons and change the setting to the desired temperature.

EG

2. Manual Operation

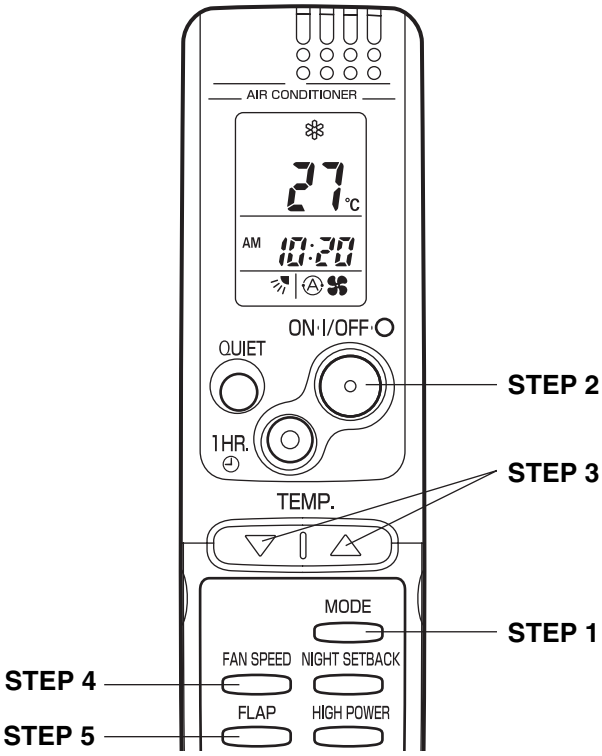

NOTE Check that the circuit breaker on the power panel is turned on and that the operation selector of the indoor unit is in the ON position.

If the automatic operation settings of the unit do not meet your needs, press the setting buttons as described below and change the settings as desired.

STEP 1	Press the MODE selector button and select the desired mode. For heating operation → For dehumidifying operation → For cooling operation → For fan only operation →
STEP 2	To start the air conditioner, press the ON/OFF operation button.
STEP 3	Press the TEMP. setting buttons to change the temperature setting to the desired temperature. Adjustable temperature range: 30 °C max. or 86 °F max. 16 °C min. 60 °F min.
STEP 4	Set the FAN SPEED selector button to the setting you want.
STEP 5	Press the FLAP button and set the airflow direction as desired. (Refer to “Adjusting the Airflow Direction” on page 21.)

To stop the air conditioner, press the ON/OFF operation button again.

NOTE

- Choose the best position in the room for the remote control unit, which also acts as the sensor for room comfort and transmits the operating instructions. Once you've found this best position, always keep the remote control unit there.
- This appliance has a built-in 5-minute time delay circuit to ensure reliable operation. When the operation button is pressed, the compressor will start running within three minutes. In the event of power failure, the unit will stop.

3. Adjusting the Fan Speed

A. Automatic fan speed Simply set the FAN SPEED selector button to the Ⓐ position. This automatically sets the best fan speed for the room temperature.

B. Manual fan speed If you want to adjust fan speed manually during operation, just set the FAN SPEED selector button as desired. [, , or]

4. Fan Only

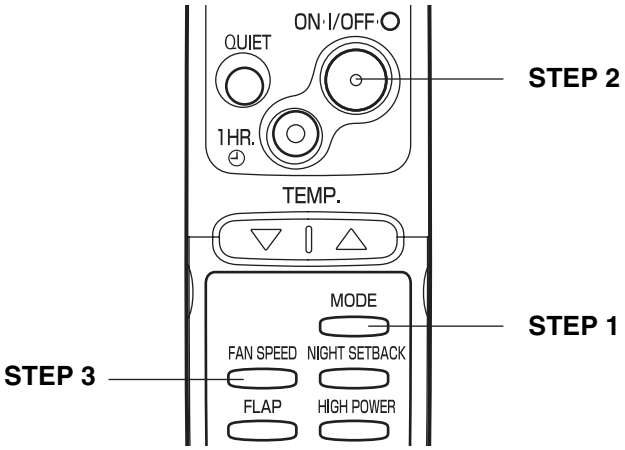

If you want to circulate air without any temperature control, follow these steps:

STEP 1	Press the MODE selector button to switch to the fan mode .
STEP 2	Press the ON/OFF operation button.
STEP 3	Press the FAN SPEED selector button to select the fan speed of your choice (, or).

5. Night Setback Mode

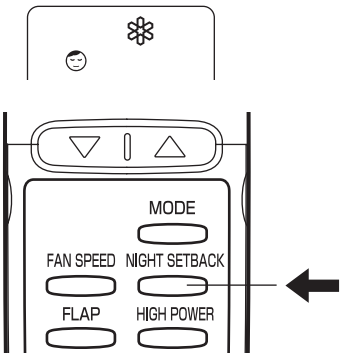

Night Setback Mode is used for saving energy.

Press the NIGHT SETBACK button while operation.
The mark appears in the display.

To release the night setback function, press the NIGHT SETBACK button again.

EG

A. In Cooling and DRY Mode: (and)

When the night setback mode is selected, the air conditioner automatically raises the temperature setting 1 °C when 30 minutes have passed after the selection was made, and then another 1 °C after another 30 minutes have passed, regardless of the indoor temperature when night setback was selected. This enables you to save energy without sacrificing comfort. This function is convenient when gentle cooling is needed.

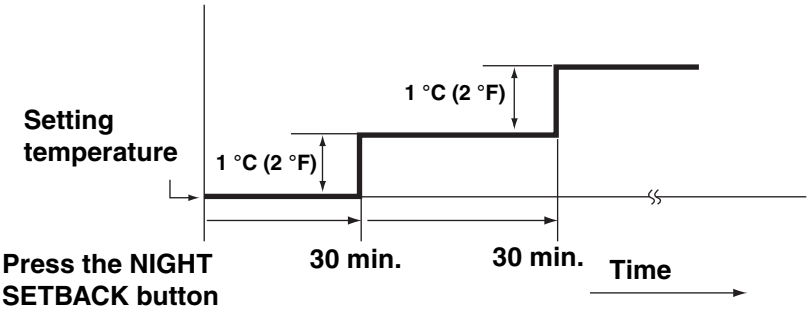

B. In Heating Mode: ( )

When the night setback mode is selected, the air conditioner automatically lowers the temperature setting 2 °C when 30 minutes have passed after the selection was made, and then another 2 °C after another 30 minutes have passed, regardless of the indoor temperature when night setback was selected. This enables you to save energy without sacrificing comfort. This function is convenient when gentle heating is needed.

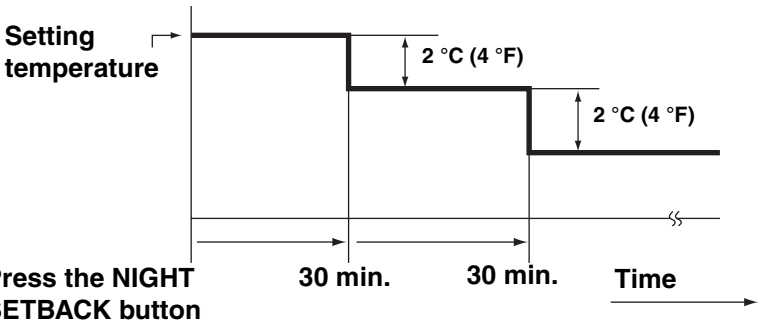

6. QUIET Mode

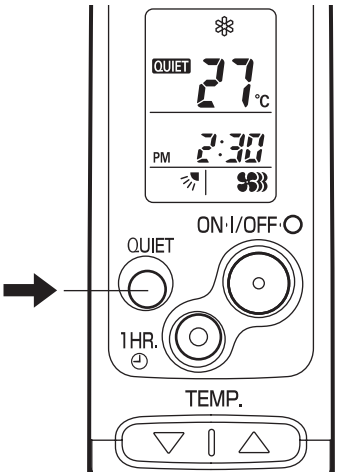

QUIET Mode is used to reduce the fan sound of the indoor unit.

Press the QUIET button.
The QUIET mark appears in the display.

To cancel, press QUIET button again.

- In QUIET Mode, the fan rotates at a slower speed than the fan speed setting.
- If the unit is already operating with a very low (LL) airflow, the fan sound may not change even if the QUIET button is pressed.

7. HIGH POWER Mode

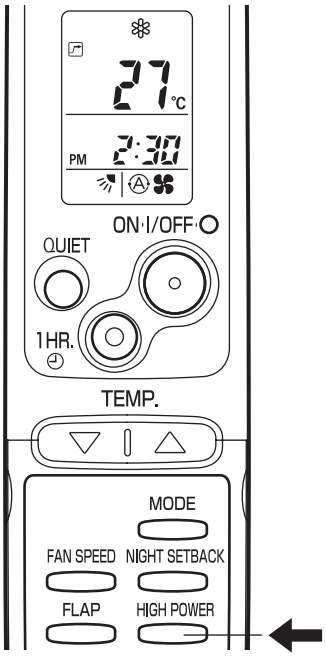

HIGH POWER mode can be used to increase the output of the indoor unit for all operation modes except automatic operation.

Press the HIGH POWER button.
The mark appears in the display.

To cancel, press HIGH POWER button again.

- When the HIGH POWER button is pressed, the unit operates at maximum output for 30 minutes, regardless of the desired temperature. The fan speed is 1 step above “High”.
- HIGH POWER Mode cannot be used when the operation mode is Automatic Operation.
- QUIET Mode and HIGH POWER Mode cannot be used at the same time.

NOTE

- When set to High fan speed during heating operation, the fan runs at High fan speed even though the mark is displayed.
- Depending on the operating conditions, the fan speed may be increased by a small amount only.

Special Remarks

EG

"DRY" (💧) Operation

How it works?

- Once the room temperature reaches the level that was set, the unit's operation frequency is changed automatically.
- During DRY operation, the fan speed is automatically runs at lower speed for providing a comfortable breeze.
- "DRY" operation is not possible if the indoor temperature is 15 °C or less.

Heating (☀) Operation

Heating performance

- Because this air conditioner heats a room by drawing in the heat of the outside air (heat pump system), the heating efficiency will fall off when the outdoor temperature is very low. If sufficient heat cannot be obtained with this air conditioner, use another heating appliance together with it.

Defrosting

- When the outdoor temperature is low, frost or ice may form on the heat exchanger coil, reducing heating performance. When this happens, a microcomputer defrosting system operates. At the same time, the fan on the indoor unit stops and the OPERATION lamp lights up red and orange alternately until defrosting is completed. Heating operation restarts after several minutes. (This interval will vary slightly depending upon the outdoor temperature and the way in which frost forms.)

Cold draft prevention

- For several minutes after the start of heating operation, the indoor fan runs at lower speed until the indoor heat exchanger coil has warmed up sufficiently. However, the fan may remain stopped when the room temperature is low. This is because the COLD DRAFT PREVENTION SYSTEM is operating.

Power failure during operation

- In the event of power failure, the unit will stop. When the power is resumed, the unit will restart automatically within five minutes by the remote control unit.

Clicking Sound

Clicking sound is heard from the air conditioner

- In heating or cooling operation, any plastic parts may expand or shrink due to a sudden temperature change. In this event, a clicking sound may occur. This is normal, and the sound will soon disappear.

Remote Control Unit

- The remote control unit sends the setting condition to the air conditioner regularly at five minute intervals.

Setting the Timer

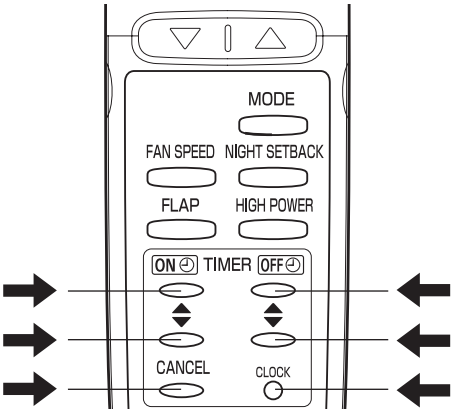

NOTE In the descriptions below, the following settings are used for the temperature and time indicator selector button on the bottom front section of the remote control.

- Temperature: °C
- Time: AM, PM

1. How to set the present time

(Example) To set to 10:30 pm.

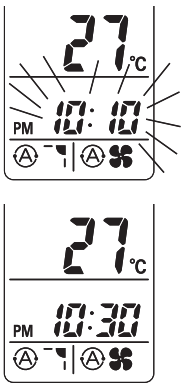

Operation	Indication
1. Press the CLOCK button once if the time indicator is not flashing.	The time indication alone flashes.
2. Press the Advance, Return (▲, ▼) button until PM 10:30 is displayed.	The time can be set in 1-minute increments. Holding down the button advances the time rapidly in 10-minute increments.
3. Press the CLOCK button again.	This completes the setting of the current time.

2. How to set the OFF time

(Example) To stop the air conditioner at 11:00 am.

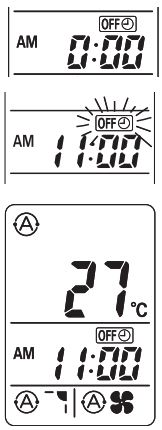

1. Press the OFF TIME setting button once.	The timer OFF indication is displayed, and the present OFF time is shown.
2. Press the Advance, Return (▲, ▼) button until AM 11:00 is displayed.	The timer OFF indication blinks. The time can be set in 10-minute increments. Holding down the button advances the time rapidly in 10-minute increments.
3. Wait a few seconds, and then the setting is complete.	The timer OFF indication stops blinking and the present time is displayed.

3. How to set the ON time

(Example) To start operation at 7:10 am.

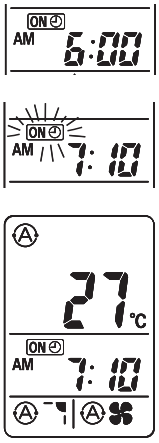

Operation	Indication
1. Press the ON TIME setting button once.	The timer ON indication is displayed, and the present ON time is shown.
2. Press the Advance, Return (▲, ▼) button until AM 7:10 is displayed.	The timer ON indication blinks. The time can be set in 10-minute increments. Holding down the button advances the time rapidly in 10-minute increments.
3. Wait a few seconds, and then the setting is complete.	The timer ON indication stops blinking and the present time is displayed.

4. How to set DAILY ON/OFF REPEAT timer

(Example) To start operation at 7:10 am. and stop the air conditioner at 11:00 am.

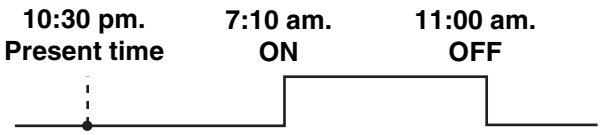

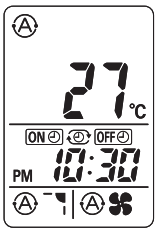

1. Set the timer ON/OFF times as shown in 2-1, 2, 3 and 3-1, 2, 3.	The present time 10:30 pm. and ON OFF are displayed.

NOTE

- The ON/OFF combination timer uses the current time as the reference, and it is activated starting from whichever set time comes first.
- With the ON/OFF combination timer, the settings are repeated every day.
- You can check the timer ON/OFF times after you have set them by pressing the ON TIME and OFF TIME setting buttons.

To cancel a timer program

- Press the CANCEL button.
- When either an ON or OFF timer is to be canceled, press the button corresponding to the timer whose program is to be canceled, and then press the CANCEL button.

NOTE

- The airflow direction, fan speed and temperature setting can be changed after a timer program has been set even when the unit is stopped. Even when operation is stopped during an ON timer program, the unit will start operating when the set time is reached provided that the program is not canceled.
- When the ON timer and OFF timer are set to the same time, the timer operates as if it is turned off.

Using the 1-Hour OFF Timer

1. 1-Hour OFF Timer

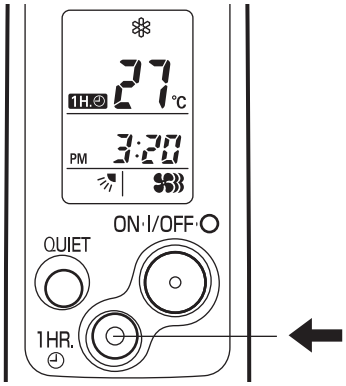

This function causes the unit to operate for one hour and then stop, regardless of whether the unit is on or off when this button is pressed.
The 1H. indicator in the display indicates that this function is operating.

Setting procedure:
Regardless of whether the unit is operating or stopped, press the 1 HR. TIMER button.
1H. appears in the display.

Cancellation procedure:
Press the ON/OFF operation button to turn the unit off, wait for the unit to stop operating, and then press the ON/OFF operation button again.
The 1-Hour Timer function is now cancelled and the unit operates normally.

NOTE

- If, while the 1-Hour Timer function is operating, the 1HR. TIMER button is pressed once to cancel the function and then again, the unit continues to operate for one hour from that point in time and then stops.
- It is not possible to use the OFF Timer and 1-Hour OFF Timer together. Whichever function is set last takes precedence. If the 1 HR. TIMER button is pressed while the TIMER OFF function operates, the OFF Timer is cancelled and the unit will stop operating one hour later.

2. Operation together with the DAILY ON/OFF REPEAT Timer

The 1-Hour OFF Timer setting is given priority over the DAILY ON/OFF REPEAT setting.

Tips for Energy Saving

Do not

- **Block the air intake and outlet of the unit. If they are obstructed, the unit will not work well, and may be damaged.**
- Let direct sunlight into the room. Use sunshades, blinds or curtains. If the walls and ceiling of the room are warmed by the sun, it will take longer to cool the room.

Do

- Always try to keep the air filter clean. (Refer to “Care and Cleaning”.) A clogged filter will impair the performance of the unit.
- To prevent conditioned air from escaping, keep windows, doors and any other openings closed.

Adjusting the Airflow Direction

1. Horizontal The horizontal airflow can be adjusted by moving the vertical vanes with your hands to the left or right.

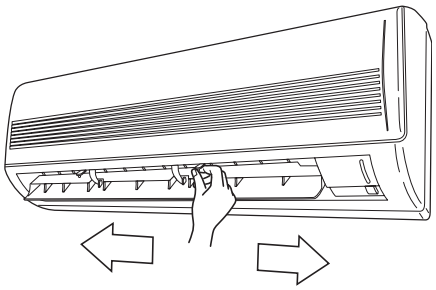

CAUTION **When the humidity is high, the vertical vanes should be in the front position during the cooling or dehumidifying operation. If the vertical vanes are positioned all of the way to the right or left, condensation may begin to form around the air vent and drip down.**

2. Vertical The vertical airflow can be adjusted by moving the flap with the remote control unit. Do not move the flap with your hands. Confirm that the remote control unit has been turned on. Use the FLAP button to set either the sweep function or one of the six airflow direction settings.

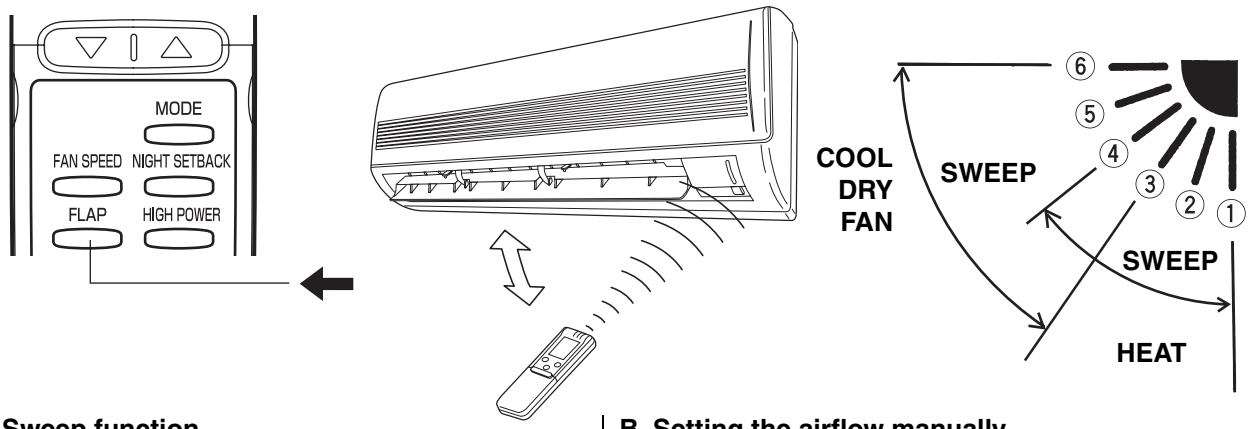

A. Sweep function

The flap starts moving up and down to deliver air over the sweep range.

C. Auto flap function

The flap is set to the recommended position.

B. Setting the airflow manually

Referring to the above illustration, use the FLAP button to set the airflow direction within the range used during the heating, cooling, or dehumidifying operation.

NOTE

- The flap automatically closes when the unit is off.
- During the heating operation, the fan speed will be very low and the flap will be in the horizontal position (position ⑥) until the air being blown out of the unit begins to warm. Once the air warms up, the flap position and fan speed change to the settings specified with the remote control.

CAUTION

- **Use the FLAP button on the remote control to adjust the position of the flap. If you move the flap by hand, the flap position according to the remote control and the actual flap position may no longer match. If this should happen, shut off the unit, wait for the flap to close, and then turn on the unit again; the flap position will now be normal again.**
- **Do not have the flap pointed down during cooling operation. Condensation may begin to form around the air vent and drip down.**

Operation without the Remote Control Unit

INDOOR UNIT

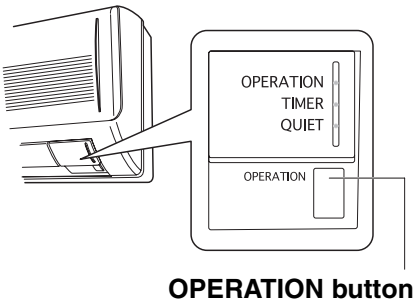

If you have lost the remote control unit or it has trouble, follow the steps below.

When the air conditioner is not running
Each time the OPERATION button is pressed, the type of operation conducted is indicated by the changing color of the OPERATION lamp. Press the button and select the lamp color that suits your preference for operation.

Cooling operation (green) → Heating operation (red) → Stop (lamp off)

NOTE The temperature is set to the room temperature minus 2°C during the cooling operation and to the room temperature plus 2°C during the heating operation, and the fan speed and flap are set to Auto.

Care and Cleaning

WARNING

1. **For safety, be sure to turn the air conditioner off and also to disconnect the power before cleaning.**
2. **Do not pour water on the indoor unit to clean it. This will damage the internal components and cause an electric shock hazard.**

Casing and Grille (Indoor Unit)

Clean the casing and grille of the indoor unit with a vacuum cleaner brush, or wipe them with a clean, soft cloth.

If these parts are stained, use a clean cloth moistened with a mild liquid detergent. When cleaning the grille, be careful not to force the vanes out of place.

CAUTION

1. **Never use solvents, or harsh chemicals when cleaning the indoor unit. Do not wipe the plastic casing using very hot water.**
2. **Some metal edges and the fins are sharp and may cause injury if handled improperly; be especially careful when you clean these parts.**
3. **The internal coil and other components of the outdoor unit must be cleaned every year. Consult your dealer or service center.**

Anti-Mold Filter

The anti-mold filter behind the air intake grille should be checked and cleaned at least once every two weeks.

How to remove the anti-mold filter

1. Grasp both ends of the air intake grille, and remove it by opening towards the front and pulling towards you.

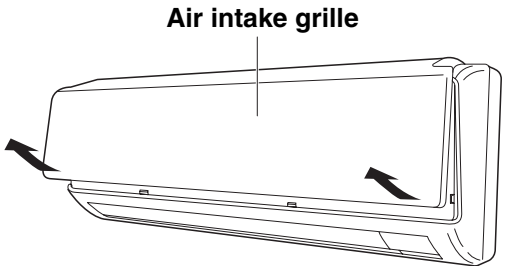

2. Remove the anti-mold filter attached to the rear of the air intake grille.

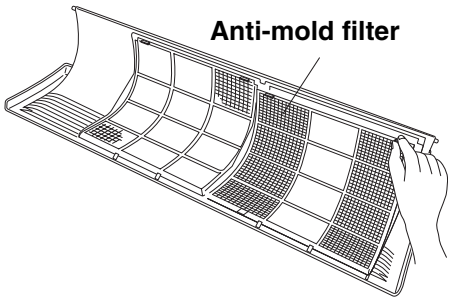

Cleaning

Use a vacuum cleaner to remove light dust. If there is sticky dust on the filter, wash the filter in lukewarm, soapy water, rinse it in clean water, and dry it.

How to replace the anti-mold filter

1. With the FRONT mark of the anti-mold filter at the front, align the two indentions near the mark with the hooks at the rear of the air intake grille, and then mount the anti-mold filter.

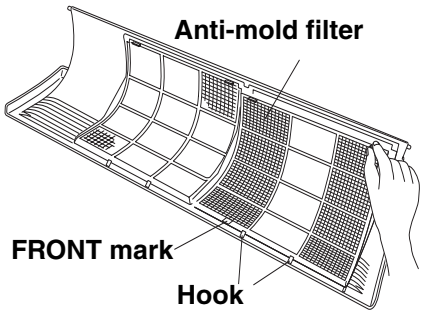

2. Allow the edge of the air intake grille to slide into the top of the indoor unit, and then insert it all the way inside.

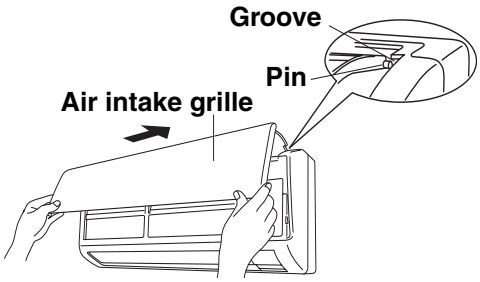

3. Press in the bottom right and left corners of the air intake grille to attach the indoor unit.

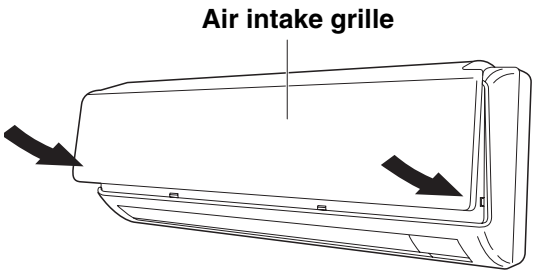

NOTE Attach so that the round pins at the top right and left corners of the air intake grille are inserted into the grooves at the top right and left of the indoor unit.

Air Clean Filter

The air clean filter removes dust and dirt from the air, and reduces odors and smoke from tobacco.

WARNING

This air clean filter cannot remove harmful gases or vapors nor ventilate air in the room. You must open doors or windows frequently when you use gas or oil heating appliances. Otherwise there is a risk of suffocation in extreme cases.

How to install the air clean filter

The air clean filter needs to be installed behind the air intake grille.

1. Remove the air intake grille.
2. Install the air clean filter in the position shown in the figure.
3. Remount the air intake grille.

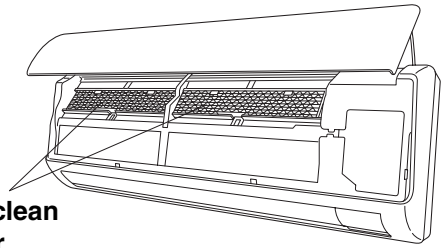

NOTE

- In general, the filter should be replaced once every three months.
- Dirty air clean filters cannot be washed and reused. Purchase a replacement filter at your local dealer.

Cleaning the main unit and remote control unit

- Wipe clean using a soft, dry cloth.
- To remove stubborn dirt, moisten a cloth in warm water no hotter than 40 °C, wring thoroughly, and then wipe.
- The air intake grille can be removed in order to wash it with water.

Removing and remounting the air intake grille

Refer to “How to remove the anti-mold filter” and “How to replace the anti-mold filter” on page 23.

CAUTION

When using a footstool or the like, be careful not to let it tip over.

Washing the grille with water

- Clean the grille gently using a soft sponge, or the like. Then wipe away any remaining moisture.
- Neutral detergent may be used to remove stubborn dirt. Then rinse thoroughly with water and wipe away any remaining moisture.

Troubleshooting

If your air conditioner does not work properly, first check the following points before requesting service. If it still does not work properly, contact your dealer or service center.

Trouble	Possible Cause	Remedy
Air conditioner does not run at all.	1. Power failure. 2. Leakage circuit breaker tripped. 3. Line voltage is too low. 4. Batteries in remote control unit have run down.	1. Restore power. 2. Contact service center. 3. Consult your electrician or dealer. 4. Replace batteries.
OPERATION lamp blinks and air conditioner does not operate.	Trouble in system.	Contact service center.
Compressor runs but soon stops.	Obstruction in front of condenser coil.	Remove obstruction.
Poor cooling (or heating) performance.	1. Dirty or clogged air filter. 2. Heat source or many people in room. 3. Doors and/or windows are open. 4. Obstacle near air intake or air discharge port. 5. Thermostat is set too high for cooling (or too low for heating). 6. (Outdoor temperature is too low for heating.)	1. Clean air filter to improve airflow. 2. Eliminate heat source if possible. 3. Shut them to keep the heat (or cold) out. 4. Remove it to ensure good airflow. 5. Set the temperature lower (or higher). 6. (Consult your dealer or try to use another heat appliance.)
Clicking sound is heard from the air conditioner.	In heating or cooling operation, any plastic parts may expand or shrink due to a sudden temperature change. In this event, a clicking sound may occur.	This is normal, and the sound will soon disappear.
OPERATION lamp lights but outdoor unit will not run.	1. The use of cellular phones near the air conditioner may cause disturbance to its normal operation.	1. Turn off the power then restart the air conditioner after a while. 2. Consult your dealer.

Operating Range

The air conditioner is operable within the temperature ranges as listed below:

	Temperature	Indoor air temperature	Outdoor air temperature
COOLING	Max.	32 °C DB / 23 °C WB	43 °C DB
	Min.	19 °C DB / 14 °C WB	19 °C DB
HEATING	Max.	27 °C DB	24 °C DB / 18 °C WB
	Min.	16 °C DB	–8 °C DB/ –9 °C WB

SANYO Electric Co., Ltd.
Osaka, Japan
SM700590 FEB/2004
Printed in Japan